Non-Confidential Business Information (Non-CBI)

Certification Test Report

Hearth and Home Technologies, Inc.

Freestanding Wood Stove

Model: Dauntless FlexBurn Catalytic

Prepared for:	Hearth and Home Technologies, Inc. 352 Mountain House Road Halifax, PA 17032
Prepared by:	OMNI-Test Laboratories, Inc. 13327 NE Airport Way Portland, OR 97230 (503) 643-3788
Test Period:	October 2, 2019 – October 3, 2019
Report Date:	December 5, 2019
Report Number:	0061WS104E

All data and information contained in this report are confidential and proprietary to Hearth and Home Technologies, Inc. Its significance is subject to the adequacy and representative character of the samples and to the comprehensiveness of the tests, examinations, or surveys made. The contents of this report cannot be copied or quoted, except in full, without specific, written authorization from Hearth and Home Technologies, Inc. and OMNI-Test Laboratories, Inc. No use of the OMNI-Test Laboratories, Inc. name, logo, or registered mark (O-TL) is permitted, except as expressly authorized by OMNI-Test Laboratories, Inc. in writing.

AUTHORIZED SIGNATORIES

This report has been reviewed and approved by the following authorized signatories:

Technician:

Bruce Davis
OMNI-Test Laboratories, Inc.

QA Review:

Alex Tiegs, QA Administrator
OMNI-Test Laboratories, Inc.

TABLE OF CONTENTS

PREFACE ..... (3 pages)

1. SAMPLING PROCEDURES AND TEST RESULTS 4
   Introduction 5
   Individual Run Summaries 6

   Summary Tables
   Table 1 - Particulate Emissions Results 7
   Table 2 - Particulate Emissions Results (First Hour) 7
   Table 3 – B415.1 Efficiency and CO Emissions 7
   Table 4 - Test Facility Conditions 8
   Table 5 - Fuel Measurements and Crib Descriptions - Pretest 8
   Table 6 - Fuel Measurements and Crib Descriptions - Test 8
   Table 7 - Dilution Tunnel Gas Measurements and Sampling Data 9
   Table 8 – Average Temperature Data 9
   Table 9 - Pretest Configurations 9
   Table 10 - Test Configurations 10

2. PHOTOGRAPHS/APPLIANCE DESCRIPTION/DRAWINGS 12
   Fuel Photographs 14
   Appliance Description 15
   Labeling & Owner's Manual 37

3. TEST DATA BY RUN 108
   Run 1 111
   Run 2 129
   Run 3 150
   Run 4 168

4. QUALITY ASSURANCE/QUALITY CONTROL 185
   Sample Analysis 193
   Calibrations – ASTM E2515, ASTM E2780 204
   Example Calculations 217
   Alt 125 Letter 230

Section 1

Sampling Procedures and Test Results

INTRODUCTION

Hearth and Home Technologies, Inc. retained *OMNI* to perform U.S. Environmental Protection Agency (EPA) certification testing on the Dauntless FlexBurn Catalytic wood stove. The Dauntless FlexBurn Catalytic wood stove is a radiant freestanding-type catalytic room heater. The firebox is constructed of cast iron. Usable firebox volume was measured to be 1.82 cubic feet and the stove is vented through a six-inch flue collar located at the rear of the stove top.

The testing was performed at a Hearth & Home facility located in Bethel Vermont. The altitude of the laboratory is 590 feet above sea level. The unit was received in good condition and logged in on October 1, 2019, then assigned and labeled with *OMNI* ID #2389. *OMNI* representative Bruce Davis conducted the certification testing and completed all testing by October 3, 2019.

This report is organized in accordance with the EPA-recommended outline and is summarized in the Table of Contents immediately preceding this section. The results in this report are limited to the item submitted.

SAMPLING PROCEDURE

The Dauntless FlexBurn Catalytic wood stove was tested in accordance with the U.S. EPA 40 CFR Part 60, Subpart AAA – Standards of Performance for New Residential Wood Heaters using ASTM E2515, ASTM E3053, and Alt-125. Particulate emissions were measured using sampling trains consisting of two filters (front and back).

The model Dauntless FlexBurn Catalytic was tested for thermal efficiency and carbon monoxide (CO) emissions in accordance with CSA B415.1-10 using Maple and Beech cord wood.

SUMMARY OF RESULTS

The weighted average emissions of the three test runs included in the results indicate a particulate emission rate of 1.20 grams per hour. A total of four certification tests were conducted; Run number three was a high burn conducted to create a coal bed for run 4, no emissions sampling occurred during this test.

The Dauntless FlexBurn-CAT results are within the emission limit of 2.5 g/hr. for affected facilities when tested with cord wood, manufactured on or after May 15, 2020.

The proportionality results for all 4 test runs were acceptable. Quality check results for each test run are presented in Section 4 of this report.

INDIVIDUAL RUN SUMMARIES – Certification Testing

Run 1 - Test procedures followed to produce a high burn rate with a primary air setting of fully open. Observed burn rate was calculated at 2.88 kg/hr. Emissions results were calculated using particulate sampling from Maple cordwood kindling, start-up fuel, and test fuel load combined (cold to hot). Burn rate, and efficiency were calculated using data from the test fuel load only (hot to hot).
No sampling anomalies occurred, this test run was determined to be valid for inclusion in the weighted average.

Run 2 - Test procedures were followed to produce a medium burn rate with a primary air setting of full closed. Observed burn rate was calculated at 0.97 kg/hr. Emissions and efficiency results were calculated using a hot to hot burn cycle using Maple cordwood, a coal bed generated by the high burn procedure was used. No sampling anomalies occurred, this test run was determined to be valid for inclusion in the weighted average.

Run 3 - Test procedures followed to produce a high burn rate with a primary air setting of fully open. Observed burn rate was calculated at 2.66 kg/hr using data from the fuel load only (hot to hot). Emissions sampling on the Beech cordwood fuel load did not occur during this procedure, it was conducted to create a coal bed for run 4.

Run 4 - Test procedures were followed to produce a low burn rate with a primary air setting of full closed. Observed burn rate was calculated at 1.01 kg/hr. Emissions and efficiency results were calculated using a hot to hot burn cycle using Beech cordwood, a coal bed generated by the high burn procedure was used. No sampling anomalies occurred, this test run was determined to be valid for inclusion in the weighted average.

Table 1 – Particulate Emissions

Run	**Burn Rate** Calculated from a Hot to Hot burn cycle (kg/hr dry)	**ASTM E2515 Emissions** (g/hr)	**ASTM E3053 Weighting Factor** (%)	**ASTM E3053 Weighted Emissions** (g/hr)
1	2.88	[1] 4.37	20	0.874
2	0.96	0.55	40	0.220
4	1.01	0.27	40	0.108
The sum of weighted particulate emission of 3 test runs: 0.874 + 0.220 + 0.108 = **1.202**				

1. Results are from a cold to hot cycle including kindling and start-up fuel.

Table 2 – Particulate Emissions (First Hour)

Run	**ASTM E2515 Emissions – First Hour** (g/hr)
1	8.62
2	0.82
4	0.68

Table 3 – B415.1 Efficiency and CO Emissions

Run	**Heat Output (BTU/hr)**	**HHV Efficiency (%)**	**LHV Efficiency (%)**	**CO Emissions (g/MJ Output)**	**CO Emissions (g/kg Dry Fuel)**	**CO Emissions (g/min)**
1	41,943	74.9	80.1	5.62	84.10	4.14
2	14,572	79.2	84.7	3.84	60.72	0.984
4	14,518	78.1	83.6	4.00	58.76	1.02
Weighted average HHV efficiency of 3 tests: 14.98 + 31.68 + 31.24 = **77.9 %.**						
Average CO emissions: (4.14 + 0.984 + 1.02)/3 = **2.05 g/min**.						

Table 4 – Test Facility Conditions

Run	Room Temperature (°F)		Barometric Pressure (Hg)		Air Velocity (ft/min)	
	Before	**After**	**Before**	**After**	**Before**	**After**
1	68	79	29.34	29.47	<50	<50
2	78	65	29.49	29.58	<50	<50
3	73	69	29.62	29.57	<50	<50
4	75	74	29.52	29.46	<50	<50

Table 5 – Kindling and Start-up Fuel Description Summary

Run	Kindling Weight Wet Basis (lbs)	Start-up Fuel Weight Wet Basis (lbs)	Residual Start-up fuel weight (lbs)
1	3.60	5.47	2.0
3	3.68	5.34	2.4

Table 6 – Fuel Measurement and Cordwood Description Summary – TEST

Run	Test Fuel Wet Basis (lbs)	Firebox Volume (ft^3)	Fuel Loading Density Wet Basis (lbs/ft^3)	Test Fuel Dry Basis (lbs)	[1.]Test Fuel Consumed During Test Dry Basis (lbs)	Piece Length (in)
1	18.27	1.82	10.0	[1]14.92 + 7.8	19.0	5@16
2	21.78	1.82	12.0	17.8	17.7	6@16
3	18.91	1.82	10.4	[1]15.56 + 7.7	19.91	5@16
4	21.16	1.82	11.6	17.23	16.6	5@16

1. Includes start-up and kindling fuel for high burn tests 1, and 3.

Table 7 – Dilution Tunnel Gas Measurements and Sampling Data Summary

Run	Length of Test (min)	Average Dilution Tunnel Gas Measurements		
		Velocity (ft/sec)	Flow Rate (dscf/min)	Temperature (°F)
1	186	19.28	207.9	95
2	500	19.49	217.9	78
4	449	19.48	212.8	90

Table 10 – Test Configurations

Run	Startup Procedures	Combustion Air
1	Fuel Loading: Kindling and start-up fuel loaded seperatly, a torch was used for 15 seconds to establish a fire. At 16.5 minutes added start-up fuel. placed fuel load into the firebox and closed the loading door. Loading required less than 1 minute to complete. Door: For kindling and start-up fuel, loading door was closed by 15 seconds. Test fuel load; fuel loading door was closed at 120 seconds. Primary Air: Air control fully open for the entire test. Secondary: No user control for secondary air. Fan: Fan operated on high the entire test.	Fully open for entire test.
2	Fuel Loading: Test fuel loaded onto coal bed generated by test number 1 in 40 seconds. Door: Closed by 80 seconds. Primary Air: Fully open, then set to fully closed by 7 minutes. Secondary: No user control for secondary air. Fan: Fan on high entire test.	Two "clicks" from full closed.
3	Fuel Loading: Kindling and start-up fuel loaded together, a torch was used for 15 seconds to establish a fire. Fuel loading required 48 seconds to complete. Door: For kindling and start-up fuel, loading door was closed by 20 seconds. Test fuel load; fuel loading door was closed 120 seconds after loading. Primary Air: Air control fully open for the entire test. Secondary: No user control for secondary air. Fan: Fan turned to high automatically approximately 25 minutes after starting kindling fire, remained on high for the entire test.	Fully open for entire test.
4	Fuel Loading: Test fuel loaded onto coal bed generated by test number 3 by 40 seconds. Door: Closed by 110 seconds. Primary Air: Fully open, then set to 1/2" by 6 minutes 50 seconds. Secondary: No user control for secondary air. Fan: Fan on high entire test.	Fully open for first 6 minutes and 50 seconds, then set to 1/2".

Section 2

Photographs/Appliance Description/Drawings

Hearth and Home Technologies

Dauntless FlexBurn Catalytic

Test Dates: October 2, 2019 – October 3, 2019

Hearth and Home Technologies
Dauntless FlexBurn Catalytic

Run 1 – Start-Up and Kindling Fuel

Run 1 – Fuel Load

Run 1 – Ignition of Kindling

Run 1 – Start-Up Fuel Loaded

Run 1 – Fuel Load, Loaded

Run 1 – Remaining Coals

Run 2 – Fuel Load

Run 2 – Fuel Load, Loaded

Run 2 – Remaining Coals

Run 3 – Start-Up and Kindling Fuel

Run 3 – Fuel Load

Run 3 – Start-Up Fuel on Kindling

Hearth and Home Technologies
Dauntless FlexBurn Catalytic

Run 3 – Fuel Load, Loaded

Run 4 – Fuel Load

Run 4 – Fuel Load, Loaded

Run 4 – Remaining Coals

WOOD HEATER DESCRIPTION

Appliance Manufacturer: Hearth and Home Technologies

Wood Stove Model: Dauntless FlexBurn Catalytic

Type: Catalytic **r**adiant freestanding

WOOD HEATER INFORMATION

Materials of Construction: The unit is constructed primarily of cast iron. The firebox is lined with refractory brick that measures 9.75” x 3.5” x 1.25”. The feed door has a 11.05” x 7.92” glass panel and 0.313” gasket.

Air Introduction System: Primary air is controlled by a Bi-metallic spring thermostat located at the right rear of the stove top. Moving the control arm fully to the left opens the air control, fully to the right closes the air. As the spring heats up, it tightens causing the controlling damper to close. Secondary air is un-controlled, it enters the appliance through an opening located at the rear of the stove on the bottom side. Air travels into the refractory secondary combustion system and enters the flame path through orifices in the refractory walls.

Combustion Control Mechanisms: Primary air is controlled by a Bi-metallic spring thermostat located at the right rear of the stove top. Moving the control arm fully to the left opens the air control, fully to the right closes the air. As the coil spring heats up, it tightens causing the controlling damper to close, cooling of the spring loosens the coil and allows the controlling damper to open. Position of the control arm sets the tension of the coil that determines how much heat is needed to cause the control damper to close.

Combustor: Combustor is an Applied Ceramics part number WA-4152001390 ceramic type with 16 cells per square inch. Outside dimensions of the face are 6.41” x 2.49”; a 430 stainless Steel, 16-gauge can is used to wrap the four outer sides. The combustor is an option to the stove model which is certified as a non-cat to 2020 requirements.

Internal Baffles: An internal baffle is not used; flame path is either directed through a bypass opening or through the refractory combustion chamber.

Other Features: A catalyst bypass is operated by a handle located on the right side of the firebox. The ash pan is accessed through a door located under the front fuel loading door, a top fuel loading door is in the stove top. Optional blower is a Fasco Transflow model 55416-25350 (70582460B), rated at 120 CFM

Flue Outlet: The 6” diameter flue outlet is located in the top rear of the unit.

WOOD HEATER OPERATING INSTRUCTIONS

Specific Written Instructions: See Section 5 of this report. All markings and instruction materials were reviewed for content prior to printing.

Labeling & Owner's Manual

MODEL / MODÈLE: "Duantless FlexBurn Catalytic / Non-Catalytic"
LISTED SOLID FUEL ROOM HEATER BURNING FIREPLACE STOVE
HOMOLOGUE POELE A COMBUSTIBLE SOLIDES

Serial No.
Nº de série: HF

BARCODE LABEL

Report #/Rapport # 0061WS104E, 0061WS104S

Tested to / Testé à: ASTM E2515, ASTM E3053, UL 1482-2011, ULC-S627-00, CAN/CSA B415.1.

Install and use only in accordance with manufacturer's installation and operation instructions. Contact local building or fire officials about restrictions and installation inspection in your area. Install only with legs provided in accordance with installation instructions.

WARNING: Risk of flame and smoke spillage. Do not obstruct the space beneath the heater.

Fuel: Use with solid wood fuel only. Do not burn other fuels.

Build a fire directly on hearth only. Do not elevate fire. Keep doors fully closed or fully open while operating.

Chimney: Use a minimum 6" diameter factory built high temperature (H.T.) chimney which is listed to UL-103-1985 (2100°F) or 8" X 8" nominal or larger approved masonry chimney with flue liner.

Do not connect this unit to a chimney flue serving another appliance.

Chimney Connector: Use a minimum 6" diameter 24 gauge chimney connector. Install chimney connector at least 18" from ceiling. Refer to local building codes and Vermont Castings Owner's Guide for precautions for passing a chimney or chimney connector through a combustible wall or ceiling.

Floor Protection U.S.: With the Vermont Castings Bottom Heat Shield installed most installations require an approved hearth pad. The Dauntless was test using a 1/2" (13mm) non-combustible hearth material with a thermal conductivity, (k) = 0.47 BTU-in/hr ft^{2}-°F, resulting in the requirement of providing total thermal resistance (R) of 1.06. (Cover with material if desired). The floor protector is required under the stove and must extend 16" from the front, 6" from the rear and sides. It must extend under the chimney connector and 2" to either side. Without Vermont Castings Bottom Heat Shield, only installations over a totally non-combustible floor such as unpainted concrete over earth are acceptable. UL 737 Doors open require 1" floor protection.

Floor Protection Canada: Operate only with Vermont Castings Bottom Heat Shield in place. When installed on a combustible floor, the Dauntless was tested using a 1/2" (13mm) non-combustible hearth material with a thermal conductivity, (k) = 0.47 BTU-in/hr ft^{2}-°F, resulting in the requirement of providing total thermal resistance (R) of 1.06. (Cover with decorative non-combustible material if desired).The floor protection must extend 450mm (18in.) to the front and 200mm (8in.) to the front and 200mm (8in.) to the sides and rear. Do not obstruct the space under the heater.

Optional Components: Fan Kit Part No. 1-10-586167. 115V 60Hz 1.1 FLA

Replace glass only with Vermont Castings 5mm ceramic glass.

Do not remove or cover this label. **Catalytic Combustor Part No. 30007430**

CAUTION: Burning of materials other than the specified fuels may make the Catalyst in the combustor inactive. The combustor is fragile, handle carefully. The performance of the catalytic device or it's durability have not been evaluated as part of the certification.

Combustion air cannot be obstructed.

Damper must be open before opening doors.

Do not overfire. Glowing parts indicate overfiring.

The space heater must be installed with the legs provided, attached as shown in the installation instructions.

Installer conformément aux instructions du fabricant. Contacter les autorités locates pour connaître les restrictions et inspections nécessaires. N'installer que les pattes qui sont incluses, en conformité avec les instructions du fabricant.

Ne pas obstruer l'espace sous le poele.

Attention: Risque de flammes et de fumée spilage. Ne pas obstruer l'espace sous le chauffe-eau.

Le registre doit être ouvert avant d'ouvrir les portes.

Combustible: N'utiliser que du bois comme combustible. Ne pas utiliser d'autres types de combustible. Inspecter et nettoyer la cheminée fréquemment - Sous certainesusages, l'accumulation de créosote peu se produire rapidement. Garder les portes toutes fermées ou toutes ouvertes durant l'opération.

Faire le feu directement sur la grille prévue à cet effet. Laisser les portes du poêle soit complètement ouverts ou complètement fermées lors de l'utilisation. Ne pasraccorder le conduit de cheminée du poêle à une cheminée servant à d'autres appareils. N'utiliser que les vitres de céramique Vermont Castings en cas de remplacement de celles-ci.

Protection plancher Canada: fonctionner uniquement avec Vermont Castings écran thermique inférieur en place. Lorsqu'il est installé sur un plancher combustible, le Encore 2010 a été testé en utilisant un 1/2 "(13mm) de matériau de âtre non-combustible avec une conductivité, (k) = 0,47 BTU-in / hr ft^{2}- °F, ce qui entraîne l'obligation de providinga résistance thermique totale (R) de 1,06. (Couvrir avec un matériau non-combustible décorative si désiré) .La protection de plancher doit se prolonger 450mm (18po.) À l'avant et 200 mm (8 po.) À l'avant et 200 mm (8 po.) Sur les côtés et à l'arrière. Ne pas obstruer l'espace sous le poêle.

Accessories disponibles au Canada: Kit de ventilateur numéro de pièce 1-10-586167

Catalyseur pièce no. 30007430

Replacer uniquement qu'avec une glace 5mm Vermont Castings.

Attention: Bruler des matières autres que celles spécifiées pourrait rendre le caralyseur inactif.

Attention: Le catalyseur est fragile, manipulaer avec soin.

US ENVIRONMENTAL PROTECTION AGENCY

Certified to comply with 2020, particulate emissions standards using cord wood at 1.1 g/hr (without catalyst) and 1.2 g/hr (catalytic). This wood heater contains a catalytic combustor which needs periodic inspection and replacement for proper operation. Consult the Owner's Manual for further information. It is against Federal Regulations to operate this wood heater in a manner inconsistent with operating instructions in the Owner's Manual.

---

*Less than 3/4" (19mm) protrusion. For additional types of installations and clearances consult your Owner's Manual. Por autres modes d'installation et degagement supplementaires, consultez votres manual du proprietaire.

Most vertical installations require a ceiling heat shield and a flue collar heat shield to be installed. Consult your Owner's Manual.

MINIMUM CLEARANCES TO COMBUSTIBLE CONSTRUCTION /
MINIMUM DE DEGAGEMENT JUSQU'A LA CONSTRUCTION COMBUSTIBLE

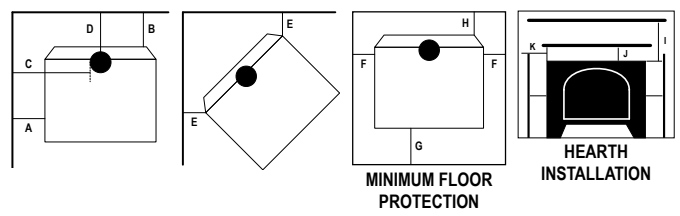

MINIMUM FLOOR PROTECTION

HEARTH INSTALLATION

VERMONT CASTINGS

Made in U.S.A. of US and imported parts. / Fabriqué aux États-Unis-d'Amérique par des pièces d'origine américaine et pièces importées.

A = Unit to Sidewall	19"
B = Unit to Backwall	20"
C = Chimney Connector to Sidewall	29"
D = Chimney Connector to Backwall	21"
E = Unit to Adjacent Wall	18-1/2"
F = Sides (Floor Protection)	6"
G = Front to Glass (Floor Protection)	16"
H = Rear (Floor Protection)	6"
I = Top to Bottom of Mantel	22"
J = Top to Bottom of Top Trim*	28"
K = Edge of Top to Side Wall	21"

A = Entre le mur lateral et l'appareil	483mm
B = Entre le mur arriereet l'appareil	508mm
C = Entre le tuyau et le mur lateral	737mm
D = Entre le tuyau et le mur arriere	534mm
E = Entre le mur adjacent et l'appareil	470mm
F = Côtes (la protection de plancher)	203mm
G = Devant, par rapport au verr	457mm
H = Arrière (la protection de plancher)	203mm
I = De haut en bas de Mantel	556mm
J = De haut en bas de la moulure supérieure*	712mm
K = Edge of Haut de paroi latérale	534mm

CAUTION: HOT WHILE IN OPERATION- DO NOT TOUCH- KEEP CHILDRENAND CLOTHING AWAY- CONTACT MAY CAUSE SKIN BURNS- SEE NAMEPLATEANDINSTRUCTIONS.KEEPFURNISHINGSANDOTHERCOMBUSTIBLE MATERIALS A CONSIDERABLE DISTANCE AWAY FROM THE APPLIANCE.

ATTENTION: CHAUD LORS DU FONCTIONNEMENT- NE TOUCHEZ PAS L'APPAREIL- GARDEZ LES ENFANTS ET LES VÊTEMENTS ÉLOIGNÉS- TOUT CONTACT PEUT ENTRAÎNER DES BRÛLURES DE LA PEAU. RÉFÉREZ-VOUS À LA PLAQUE SIGNALÉTIQUE ET AU MODE D'EMPLOI. GARDEZ LE MOBILIER ET LES AUTRES MATÉRIAUX COMBUSTIBLES BIEN À L'ÉCART DE L'APPAREIL.

Date of Manufacture / Date de fabrication:

2019	2020	2021	JAN	FEB	MAR	APR	MAY	JUN	JUL	AUG	SEP	OCT	NOV	DEC
■	■	■	■	■	■	■	■	■	■	■	■	■	■	■

Manufactured by / Fabriqué par: Hearth and Home Technologies 352 Mountain House Road, Halifax PA 17032

3-90-586190_R1

LABEL TICKET			
ECO:	88631	**LABEL SIZE:**	6.5" H x 11" W
PART # / REV:	3-90-586190_R1	**ADHESIVE:**	
ORIGINATOR:	Spidlet	**MATERIAL:**	24 Gauge Aluminum
DATE:	03/05/19	**INK:**	Black Background Aluminum Lettering
VERMONT CASTINGS 352 Mountain House Road Halifax, PA 17032		(4) Slotted Holes = .156 x .25 Barcode label must have the serial number on it. The barcode label must be able to read Code 39 Full ASCII.	

Owner's Manual

Operation & Care

INSTALLER: Leave this manual with party responsible for use and operation.
OWNER: Retain this manual for future reference.

Contact your dealer with questions on installation, operation, or service.

NOTICE: SAVE THESE INSTRUCTIONS

VERMONT CASTINGS

Dauntless FlexBurn® Wood Stove

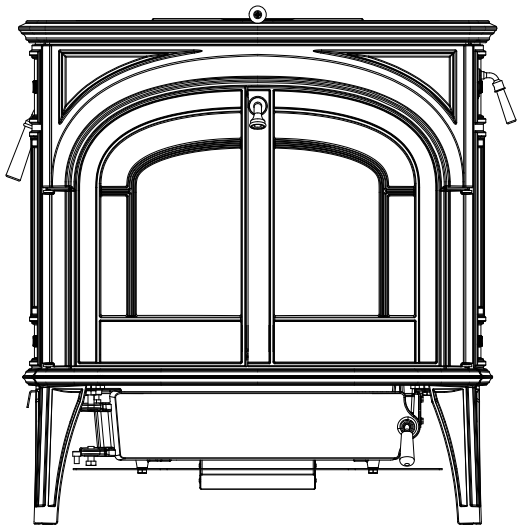

Installation and service of this appliance should be performed by qualified personnel. Hearth & Home Technologies recommends HHT Factory Trained or NFI certified professionals.

hearthED FACTORY TRAINING Fuel Your Fire

NFI NATIONAL FIREPLACE INSTITUTE A CERTIFICATION AGENCY

WARNING

If the information in these instructions is not followed exactly, a fire may result causing property damage, personal injury, or death.

- Do not store or use gasoline or other flammable vapors and liquids in the vicinity of this or any other appliance.
- Do not over fire - If appliance or chimney connector glows, you are over firing. Over firing will void your warranty.
- Comply with all minimum clearances to combustibles as specified. Failure to comply may cause house fire.

WARNING

HOT SURFACES!
Glass and other surfaces are hot during operation AND cool down.
Hot glass will cause burns.

- Do not touch glass until it is cooled
- NEVER allow children to touch glass
- Keep children away
- CAREFULLY SUPERVISE children in same room as fireplace.
- Alert children and adults to hazards of high temperatures
- **High temperatures may ignite clothing or other flammable materials.**
- Keep clothing, furniture, draperies and other flammable materials away.

NOTE

To obtain a French translation of this manual, please contact your dealer or visit www.vermontcastings.com

Pour obtenir une traduction française de ce manuel, s'il vous plaît contacter votre revendeur ou visitez www.vermontcastings.com

Congratulations on your choice of a Vermont Castings Dauntless FlexBurn® Wood Stove. At Vermont Castings we take American craftsmanship seriously. We assure you that your cast-iron Vermont Castings stove has been made with the utmost care and will provide you with many years of service.

As you become acquainted with your new stove, you will find that its appearance is matched by its functionality, due to cast iron's unique ability to absorb and radiate heat.

Also, Vermont Castings products are among the cleanest-burning wood stoves available today. However, clean burning depends on both the manufacturer and the operator. Please read this manual carefully to understand how to properly operate and maintain your stove.

At Vermont Castings, we are committed to your satisfaction as a customer. That is why we maintain an exclusive network of the finest dealers in the industry. Our dealers are chosen for their expertise and dedication to customer service. Feel free to contact your Authorized Vermont Castings Dealer anytime you have a particular question about your stove or its performance.

This manual contains valuable instructions on the operation of your Vermont Castings Dauntless FlexBurn® Wood Stove. It also contains useful information on maintenance. Please read the manual thoroughly and keep it as a reference.

This heater meets the U.S. Environmental Protection Agency's emission limits for wood heaters sold on or after May 15, 2020.

Please read this entire manual before you install and use your new stove. Failure to follow instructions may result in property damage, bodily injury, or even death.

Proposition 65 Warning: Fuels used in gas, wood burning or oil fired appliances, and the products of combustion of such fuels, contain chemicals known to the State of California to cause cancer, birth defects and other reproductive harm.
California Health & Safety Code Sec. 25249.6

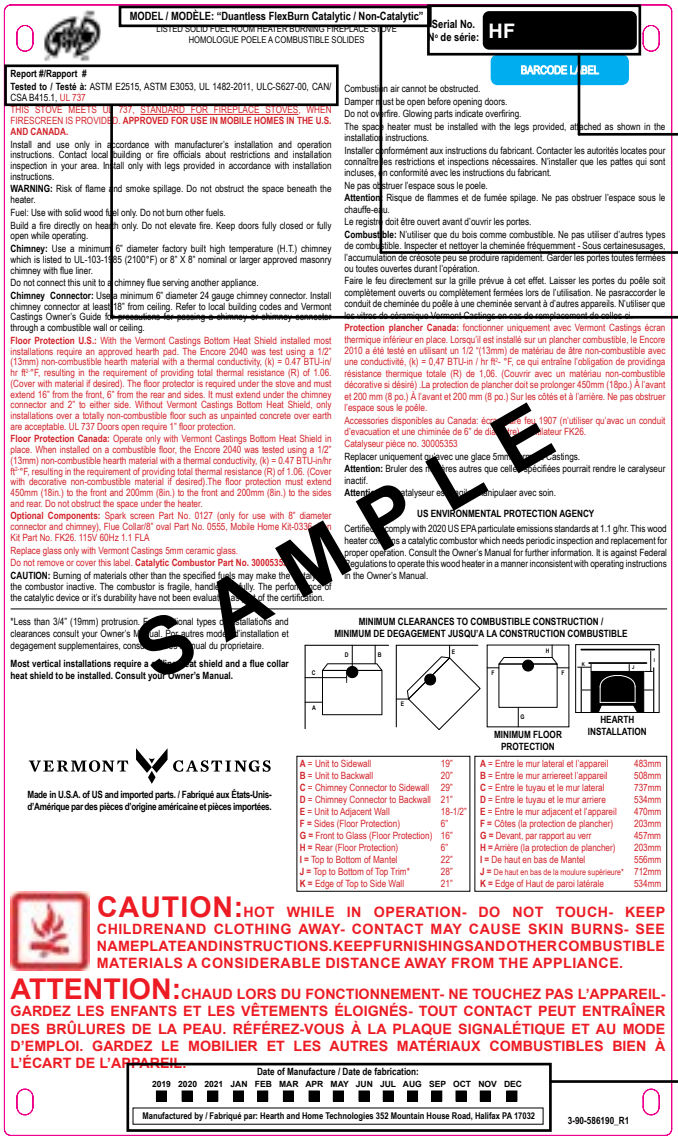

⚠ Safety Alert Key:

- ***DANGER!*** Indicates a hazardous situation which, if not avoided will result in death or serious injury.
- ***WARNING!*** Indicates a hazardous situation which, if not avoided could result in death or serious injury.
- ***CAUTION!*** Indicates a hazardous situation which, if not avoided, could result in minor or moderate injury.
- ***NOTICE:*** Indicates practices which may cause damage to the appliance or to property.

TABLE OF CONTENTS

A. Warranty Policy 4

1 Product Listing and Important Safety Information

A. Appliance Certification 7
B. BTU & Efficiency Specifications 7
C. California 7
D. Mobile Home Approved (USA ONLY) 7
E. Glass Specifications 7

2 Operating Instructions

A. The Dauntless FlexBurn® Controls 9
B. Conditioning Your Stove 10
C. Wood Burning Operation 10
D. Ways to Add Fuel 11
E. Ash Disposal 13
F. Opacity (Visible Smoke) 14
G. Negative Pressure 14
H. Important Information 15

3 Maintenance

A. Cleaning the and Replacement of Glass 16
B. Damper Adjustment 17
C. Door Latch Adjustment 17
D. Gasket Replacement 17
E. The Chimney System 18
F. The Catalytic Element 19

4 Troubleshooting Guide 21

5 Reference Material

A. Maintenance Log 22
B. Service Parts List 23
C. Contact Information 30

➔ = Contains updated information

A. Warranty Policy

Hearth & Home Technologies
LIMITED LIFETIME WARRANTY

Hearth & Home Technologies, on behalf of its hearth brands ("HHT"), extends the following warranty for HHT gas, wood, pellet and electric hearth appliances that are purchased from an HHT authorized dealer.

WARRANTY COVERAGE:

HHT warrants to the original owner of the HHT appliance at the site of installation, and to any transferee taking ownership of the appliance at the site of installation within two years following the date of original purchase, that the HHT appliance will be free from defects in materials and workmanship at the time of manufacture. After installation, if covered components manufactured by HHT are found to be defective in materials or workmanship during the applicable warranty period, HHT will, at its option, repair or replace the covered components. HHT, at its own discretion, may fully discharge all of its obligations under such warranties by replacing the product itself or refunding the verified purchase price of the product itself. The maximum amount recoverable under this warranty is limited to the purchase price of the product. This warranty is subject to conditions, exclusions and limitations as described below.

WARRANTY PERIOD:

Warranty coverage for consumers begins at the date of installation. In the case of new home construction, warranty coverage begins on the date of first occupancy of the dwelling or six months after the sale of the product by an independent, authorized HHT dealer/distributor, whichever occurs earlier. However, the warranty shall commence no later than 24 months following the date of product shipment from HHT, regardless of the installation or occupancy date. The warranty period for parts and labor for covered components is produced in the following table.

The term "Limited Lifetime" in the table below is defined as: 20 years from the beginning date of warranty coverage for gas appliances, and 10 years from the beginning date of warranty coverage for wood and pellet appliances. These time periods reflect the minimum expected useful lives of the designated components under normal operating conditions.

Warranty Period		HHT Manufactured Appliances and Venting					
Parts	Labor	Gas	Pellet	Wood	Electric	Venting	Components Covered
1 Year		X	X	X	X	x	All parts and material except as covered by Conditions, Exclusions, and Limitations listed
2 years			X	X			Igniters, auger motors, electronic components, and glass
		X	X	X			Factory-installed blowers
				X			Molded refractory panels
		X					Ignition Modules
3 years			X				Firepots, burnpots, mechanical feeders/auger assemblies
5 years	1 year	X					Vent Free burners, Vent Free ceramic fiber logs, Aluminized Burners
			X	X			Castings and Baffles
6 years	3 years			X			Catalyst - limitations listed
7 years	3 years		X	X			Manifold tubes, HHT chimney and termination
10 years	1 year	X					Burners, logs and refractory
Limited Lifetime	3 years	X	X	X			Firebox and heat exchanger, Grate and Stainless Steel Burners, FlexBurn® System (engine, inner cover,access cover and fireback)
90 Days		X	X	X	X	X	All replacement parts beyond warranty period

WARRANTY CONDITIONS:

- This warranty only covers HHT appliances that are purchased through an HHT authorized dealer or distributor. A list of HHT authorized dealers is available on the HHT branded websites.
- This warranty is only valid while the HHT appliance remains at the site of original installation.
- This warranty is only valid in the country in which the HHT authorized dealer or distributor that sold the appliance resides.
- Contact your installing dealer for warranty service. If the installing dealer or distributor is unable to provide necessary parts, contact the nearest HHT authorized dealer or supplier. Additional service fees may apply if you are seeking warranty service from a dealer other than the dealer from whom you originally purchased the product.
- Check with your dealer in advance for any costs to you when arranging a warranty call. Travel and shipping charges for parts are not covered by this warranty.
- Limited Catalyst Warranty
    - For wood burning products containing a catalyst, the catalyst will be warranted for a six-year period as follows: if the original catalyst or a replacement catalyst proves defective or ceases to maintain 70% of its particulate emission reduction activity (as measured by an approved testing procedure) within 36 months from the purchase date, the catalyst will be replaced for free.
    - From 37 to 72 months a pro-rated credit will be allowed against a replacement catalyst and labor credit necessary to install the replacement catalyst. The proration rate is as follows:

Amount of Time Since Purchase	Credit Towards Replacement Cost
0 - 36 Months	100%
37 - 48 Months	30%
49 - 60 Months	20%
61 - 72 Months	10%

    - Any replacement catalyst will be warranted under the terms of the catalyst warranty for the remaining term of the original warranty. The purchaser must provide the name, address, and telephone number of the location where the product is installed, proof of original purchase date, date of failure, and any relevant information regarding the failure of the catalyst.

WARRANTY EXCLUSIONS:

This warranty does not cover the following:

- Changes in surface finishes as a result of normal use. As a heating appliance, some changes in color of interior and exterior surface finishes may occur. This is not a flaw and is not covered under warranty.
- Damage to printed, plated, or enameled surfaces caused by fingerprints, accidents, misuse, scratches, melted items, or other external sources and residues left on the plated surfaces from the use of abrasive cleaners or polishes.
- Repair or replacement of parts that are subject to normal wear and tear during the warranty period are not covered. These parts include: paint, wood and pellet gaskets, firebricks, grates, flame guides, batteries and the discoloration of glass.
- Minor expansion, contraction, or movement of certain parts causing noise. These conditions are normal and complaints related to this noise are not covered by this warranty.
- Damages resulting from: (1) failure to install, operate, or maintain the appliance in accordance with the installation instructions, operating instructions, and listing agent identification label furnished with the appliance; (2) failure to install the appliance in accordance with local building codes; (3) shipping or improper handling; (4) improper operation, abuse, misuse, continued operation with damaged, corroded or failed components, accident, or improperly/incorrectly performed repairs (5) environmental conditions, inadequate ventilation, negative pressure, or drafting caused by tightly sealed constructions, insufficient make-up air supply, or handling devices such as exhaust fans or forced air furnaces or other such causes; (6) use of fuels other than those specified in the operation instructions; (7) installation or use of components not supplied with the appliance or any other components not expressly authorized and approved by HHT; (8) modification of the appliance not expressly authorized and approved by HHT in writing; and/or (9) interruptions or fluctuations of electrical power supply to the appliance.
- Non-HHT venting components, hearth connections or other accessories used in conjunction with the appliance.
- Any part of a pre-existing fireplace system in which an insert or a decorative gas appliance is installed.
- HHT's obligation under this warranty does not extend to the appliance's capability to heat the desired space. Information is provided to assist the consumer and the dealer in selecting the proper appliance for the application. Consideration must be given to the appliance location and configuration, environmental conditions, insulation and air tightness of the structure.

This warranty is void if:

- The appliance has been over-fired, operated in atmospheres contaminated by chlorine, fluorine, or other damaging chemicals. Over-firing can be identified by, but not limited to, warped plates or tubes, deformation/warping of interior cast iron structure or components, rust colored cast iron, bubbling, cracking and discoloration of steel or enamel finishes.
- The appliance is subjected to prolonged periods of dampness or condensation.
- There is any damage to the appliance or other components due to water or weather damage which is the result of, but not limited to, improper chimney or venting installation.

LIMITATIONS OF LIABILITY

- The owner's exclusive remedy and HHT's sole obligation under this warranty, under any other warranty, express or implied, or in contract, tort or otherwise, shall be limited to replacement, repair, or refund, as specified above. In no event will HHT be liable for any incidental or consequential damages caused by defects in the appliance. Some states do not allow exclusions or limitation of incidental or consequential damages, so these limitations may not apply to you. This warranty gives you specific rights; you may also have other rights, which vary from state to state. EXCEPT TO THE EXTENT PROVIDED BY LAW, HHT MAKES NO EXPRESS WARRANTIES OTHER THAN THE WARRANTY SPECIFIED HEREIN. THE DURATION OF ANY IMPLIED WARRANTY IS LIMITED TO DURATION OF THE EXPRESSED WARRANTY SPECIFIED ABOVE.

1 Product Listing and Important Safety Information

A. Appliance Certification

MODEL:	Dauntless FlexBurn® Wood Stove
LABORATORY:	OMNI Test Laboratories, Inc
REPORT NO.	0061WS104E, 0061WS104S
TYPE:	Solid Fuel Type Room Heaters
STANDARD(s):	ASTM E2515, ASTM E3053, UL-1482, ULC-S627, B415.1

B. BTU & Efficiency Specifications

EPA Report #:	(without catalyst) (catalytic)
EPA Certified Emissions:	1.1 g/hr (without catalyst) 1.2 g/hr (catalytic)
***LHV Tested Efficiency:**	81.6% (without catalyst) 82.6% (catalytic)
****HHV Tested Efficiency:**	76.9% (without catalyst) 77.9% (catalytic)
*****EPA BTU Output:**	12,250 - 49,430 (without catalyst)
	14,520 - 41,940 (catalytic)
******Peak BTU/Hour Output:**	54,100 (without catalyst) 48,300 (catalytic)
Vent Size:	6 Inch (152 mm)
Firebox Size:	1.8 cu. ft.
Recommended Length:	16”
Max. Wood Length:	18”
Fuel Orientation:	East, West
Fuel	Seasoned Cordwood (20% moisture)
*Weighted average LHV efficiency using Douglas Fir dimensional lumber and data collected during EPA emissions test.	
**Weighted average HHV efficiency using Douglas Fir dimensional lumber and data collected during EPA emissions test.	
***Efficiencies are based on test results calculated using B415; these calculated efficiencies are then used to calculate output BTU’s.	
****A peak BTU out of the appliance calculated using the maximum first hour burn rate from the High EPA Test and the BTU content of cord wood (8600) times the efficiency.	

The Vermont Castings Dauntless FlexBurn® Wood Appliance meets the U.S. Environmental Protection Agency Certified to comply with the 2020 particulate emission standards using cord wood.

C. California

WARNING

This product and the fuels used to operate this product (wood), and the products of combustion of such fuels, can expose you to chemicals including carbon black, which is known to the State of California to cause cancer, and carbon monoxide, which is know to the State of California to cause birth defects or other reproductive harm. For more information go to: www.P65Warnings.ca.gov

D. Mobile Home Approved (USA ONLY)

- This appliance is approved for mobile home installations in the USA when not installed in a sleeping room and when an outside combustion air inlet is provided.
- The structural integrity of the mobile home floor, ceiling, and walls must be maintained.
- The appliance must be properly grounded to the frame of the mobile home with #8 copper ground wire, and chimney must be listed to UL103 HT or a listed UL-1777 full length six inch (152mm) diameter liner must be used.
- Mobile Home Bracket Kit, part #0003264 must be installed in a mobile home installation.

E. Glass Specifications

This appliance is equipped with 5mm ceramic glass. Replace glass only with 5mm ceramic glass. Please contact your dealer for replacement glass.

⚠ WARNING

Fire Risk.

Hearth & Home Technologies disclaims any responsibility for, and the warranty will be voided by, the following actions:

- Installation and use of any damaged appliance.
- Modification of the appliance.
- Installation other than as instructed by Hearth & Home Technologies.
- Installation and/or use of any component part not approved by Hearth & Home Technologies.
- Operating appliance without fully assembling all components.
- Operating appliance without legs attached (if supplied with appliance).
- Do NOT Overfire - If appliance or chimney connector glows, you are overfiring.

Any such action that may cause a fire hazard.

Improper installation, adjustment, alteration, service or maintenance can cause injury or property damage.

For assistance or additional information, consult a qualified installer, service agency or your dealer.

In the United States it is against the law to operate this wood heater in a manner inconsistent with the operating instructions in this manual.

NOTE: Hearth & Home Technologies, manufacturer of this appliance, reserves the right to alter its products, their specifications and/or price without notice.

Vermont Castings is a registered trademark of Hearth & Home Technologies.

2 Operating Instructions

A. The Dauntless FlexBurn® Controls

Two controls regulate the performance of the Dauntless FlexBurn®: a **primary air control** supplies oxygen for the fire, and a **damper** directs air flow within the stove to activate and deactivate the combustion system, Figure 2.1.

Symbols on the stove are reminders of the correct directions for using the controls. The words 'Left' and 'Right' in these directions are *facing the stove*.

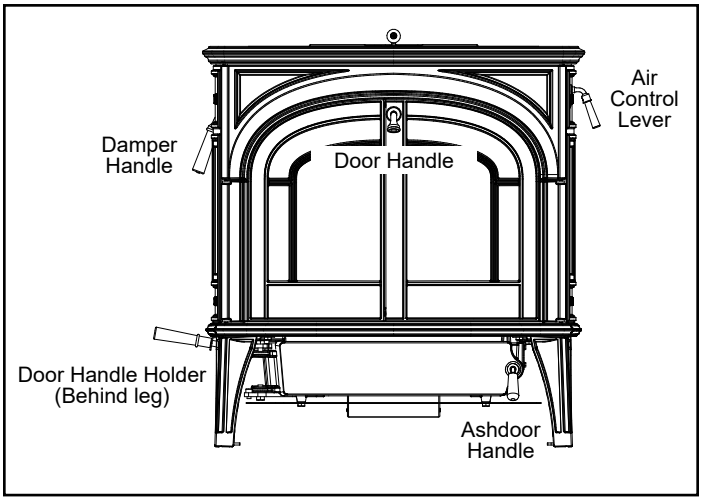

Figure 2.1 - The Dauntless FlexBurn® controls are conveniently located and easy to operate.

A Single Air Control Regulates Heat Output and Burn Time

The **primary air control lever**, on the right of the stove, controls the amount of incoming air for starting, maintaining, and reviving a fire.

Once the air control is manually set, a bi-metallic thermostat automatically maintains the heat output at a constant level for a more even heat over the life of the burn.

More air entering the stove makes the fire burn hotter and faster, while less air prolongs the burn at a lower heat output level.

For the greatest air supply and maximum heat output (but the shortest burn time), move the lever toward the front of the stove. For a fire that will last longer with less heat, move the lever toward the rear of the unit, Figure 2.2.

⚠ WARNING

This wood heater has a manufactured-set minimum low burn rate that must not be altered. It is against federal regulations to alter this setting or otherwise operate this wood heater in a manner inconsistent with operating instructions in this manual.

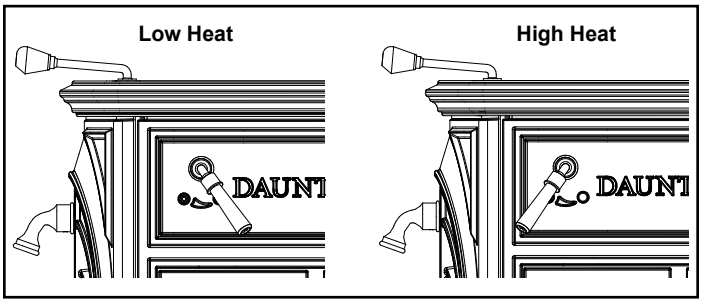

Figure 2.2 - The handle may be positioned anywhere between the two extremes for different heat levels.

A Damper Directs Air Flow Within the Stove

The **damper handle** on the left side of the stove operates the damper to direct air flow within the stove.

The damper is **open** when the handle points to the **rear**, enabling smoke to pass directly into the chimney. The damper must be open when starting or reviving a fire, and whenever the griddle or doors are opened.

The damper is **closed** when the handle points **down.** Smoke travels through the secondary combustion system where it can be further burned, before passing up the chimney, Figure 2.3.

The damper should always be either fully open or fully closed. There are no intermediate positions. When closing the damper, be sure to pull firmly enough to snap the handle into the locked position.

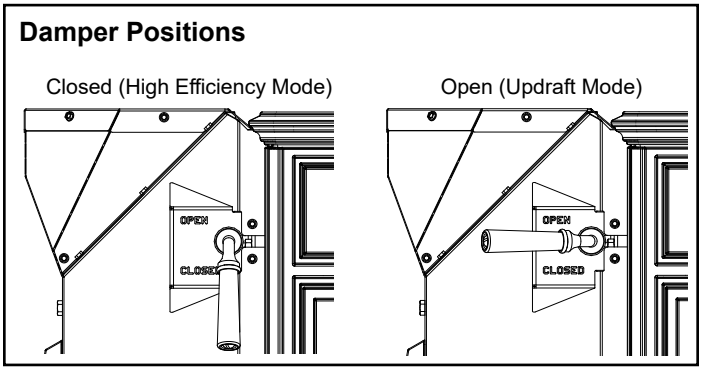

Figure 2.3 - The damper is either open or closed. There are no intermediate positions.

B. Conditioning Your Stove

Cast iron is extremely strong, but it can be broken with a sharp blow from a hammer or from the thermal shock of rapid and extreme temperature change.

The cast plates expand and contract with changes in temperature. When you first begin using your Dauntless FlexBurn®, minimize thermal stress by letting the plates adjust gradually during three or four initial break-in fires.

C. Wood Burning Operation

Burn only solid wood in the Dauntless FlexBurn® Wood Stove, and burn it directly on the grate. Do not elevate the fuel. Do not burn coal or other fuels. In the United States, it is against the law to operate this wood heater in a manner inconsistent with operating instructions in this manual.

The bypass damper must be open when starting a fire or when refueling.

Do not use chemicals or fluids to start the fire. Do not burn garbage. Never use flammable fluids such as gasoline, gasoline type lantern fuel, kerosene, charcoal lighter fluid, naptha, engine oil or similar liquids to start or "freshen up" a fire in this heater. Keep all such liquids well away from the heater while it is in use.

The following procedures are important for reliable, clean and efficient operation of your woodstove. Recommend 16" logs Properly seasoned (up to a year for denser woods) Split to 3" to 6" cross sections

Cold start:

When starting your stove at room temperature and when no burning coals are present the following kindling procedure has been found to be the most reliable.

Stack about 4 lbs of finely split kindling (1" diameter or less 10 to 20 pcs) in a 'log cabin' style directly against the rear wall. Place a small amount of newspaper on top of this pile with one or two small pieces of kindling on top. This is referred to as a top down method and while providing a slower start, also serves to preheat the combustion properly resulting in a reliable start., Figure 2.4.

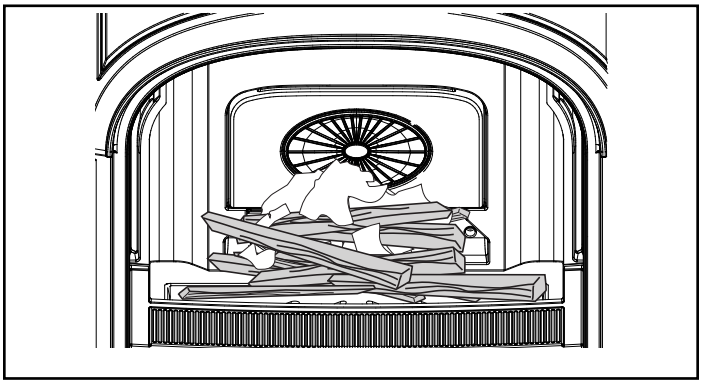

Figure 2.4 - Start the fire with newspaper and dry kindling.

With the bypass damper open and the primary air set to its highest position, light the newspaper. Leave the front door cracked until the kindling ignites, then close the doors.

After most of the kindling has burned into coals (15 to 20 minutes), open the front doors and push remaining coals and unburned wood against the rear wall. Add several pieces of larger split wood between 2 to 3 inches in diameter (about 6 lbs) directly against the rear wall and on top of the kindling coals. Close the doors and bypass to engage the combustion system. The air should remain on high for up to one hour or until the wood is mostly converted to coals.

After a hot bed of coals is produced, open the door and bypass damper and push the remaining coals again toward the rear wall. Add large pieces of wood starting against the rear wall and on top of the coals. Close the doors and bypass immediately after loading the stove.

Ideally, allow this wood load to burn at the highest air setting for the entire wood load. If this is not possible, the wood should burn for at least 30 minutes prior to reducing the primary air setting.

D. Ways to Add Fuel

To open the front doors, insert the handle into the door latch stub and turn it clockwise, Figure 2.5.

To close them, always close the left door first. Turn the handle in the right door to the left and up (to the open position) and close it. Finally, push on the door as you turn the handle counterclockwise. The doors will draw in slightly, and the handle should offer some resistance as you turn it to the closed position.

To reduce the risk of breaking the glass, avoid striking the glass or slamming the doors.

When you are not using the door handle, store it in the holder behind the left front leg of the stove.

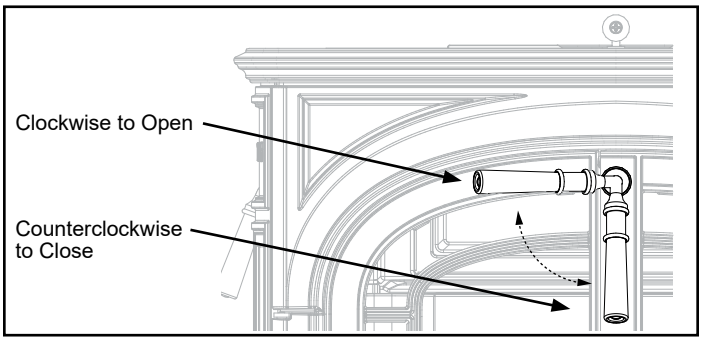

Figure 2.5 - To open the front doors, turn the handle clockwise.

For best results when refueling, wear long-cuffed stove gloves to protect your hands and forearms.

Reloading a hot stove:

When a wood load is added to a hot bed of coals (continuous use), open the bypass damper and either the top or front loading doors. Stir the hot coals to allow ash to fall through the grate. Hot coals should then be pushed against the rear wall and leveled depending on the amount of coals. Add fresh wood and close the loading door and bypass damper. If the coals are glowing and hot, it is possible to set the air control to any setting immediately after loading the stove.

Reloading a warm stove:

If the stove is relatively cold (for instance after a long overnight burn), the coal bed may need to be re-energized prior to adding a large load of wood. Open the bypass damper and either the top or front loading door. Stir the coals to allow ash to fall through the grate. Push the remaining coals toward the rear wall. Close the door(s) and bypass damper and set the primary air to the highest position. Allow the coals to re-ignite and heat the system for 10 to 15 minutes. Once the coals are glowing, a fresh batch of wood may be added following the “hot stove” procedure above.

A proper bed of coals is critical to the performance of the Dauntless stove. The rear refractory wall of the stove should be almost entirely white in color with proper operation. This indicates the combustion system is running at a proper elevated temperature. If the rear wall is black with creosote or develops a dark brown color, it is likely that the coal bed is not sufficiency large enough or hot enough. Revisit the above instructions and adjust the amount of kindling or time at high air settings to get the system hotter. Wood size or excessive moisture may also cause lower than desirable stove temperatures.

While not required, operating your stove with the catalytic combustor installed creates optimum conditions for secondary combustion and will increase your efficiency up to 15% on low burn, making sure you get the most heat out of each load of wood.

The catalytic element is a metal “honeycomb” coated with the catalytic material. The element sits at the bottom of the secondary combustion chamber. Smoke, gases and particulates that are not fully combusted during the secondary combustion process pass through the catalyst, creating a tertiary burn. This results in higher efficiency and lower emissions.

The catalyst will initiate combustion of smoke and particulates at 500° - 600°F (260° - 315°C), half the temperature normally required for unaided secondary combustion. If you followed the startup operation steps in the previous section the stove will be sufficiently hot to allow the combustor to work. Once the combustor starts working, heat generated by burning the smoke will keep it working.

To determine whether the combustor is operating, refer to the temperature probe which shows the operating range of the catalytic combustor. This is located on the back of the stove and is viewed from the top.

NOTE: It will take several minutes after closing the bypass damper for the temperature probe to fully adjust to the new temperature. If the probe indicator is below the operate catalyst range, add fuel or open the bypass damper to allow the fire to further build before engaging the catalyst again.

If the probe indicator is above the operate catalyst range, the catalytic combustor is running too hot and may be damaged. In many cases, decreasing the primary air can reduce the catalyst temperature and adding less wood with each loading can also help if overheating is persistent. Do not add wood to the stove if the probe reads above the operate catalyst range.

Avoid using a full load of very dry wood in the firebox, such as dry slab wood or wood with below 14% moisture content. This may result in continuous very high temperatures in the secondary combustion area and damage the combustor.

Never burn treated wood, garbage, solvents or trash. All of these may poison the catalyst and prevent it from operating properly. Never burn cardboard or loose paper except for kindling purposes. Never burn coal; doing so can produce soot or large flakes of char or fly ash that can coat the combustor and cause smoke to spill into the room. Coal smoke can also poison the catalyst so that it won’t operate properly.

NOTE: The metal catalytic combustor is fragile and will crack if subjected to thermal shock. Thermal shock can occur when refueling with wet wood or closing the bypass damper too early after refueling.

WARNING

DO NOT OPERATE THE STOVE WITH THE ASH DOOR OPEN. OPERATION WITH THE ASH DOOR OPEN CAN CAUSE AN OVER-FIRING CONDITION TO OCCUR. OVER-FIRING THE STOVE IS DANGEROUS AND CAN RESULT IN PROPERTY DAMAGE, INJURY OR LOSS OF LIFE.

Andirons Help Protect the Glass
Your stove has andirons to keep logs away from the glass panels. The andirons are essential to maintain clear fire viewing, and should be left in place. Since the andirons may slightly hinder refueling through the front doors, most stove owners will prefer the convenience of top loading through the griddle. Do not place fuel between the andirons and the doors.

Burn Only High-Quality Wood
The Dauntless FlexBurn® is designed to burn natural wood only; do not burn fuels other than that for which it was designed.

IMPORTANT: Do not burn any type of artificial or synthetic materials such as fire starter logs (containing wax) in this appliance. Never burn liquid-based fuels such as kerosene, gasoline or alcohol.

Burning any materials not allowed in these instructions, or over-firing the stove, may void the warranty.

You'll enjoy the best results when burning wood that has been adequately air-dried. The wood should be 16" - 18" (406-457 mm) in length. Avoid burning "green" wood that has not been properly seasoned. (**Note:** Properly seasoned firewood has a moisture content below 20 percent.) Do not burn construction materials; they often contain chemicals and metals that can damage the inside surfaces of the stove and pollute the air. Do not burn ocean driftwood; when it burns, the salt it contains will attack the cast iron.

The best hardwood fuels include oak, maple, beech, ash, and hickory that has been split, stacked, and air-dried outside under cover for at least one year.

If hardwood is not available, you can burn softwoods that include tamarack, yellow pine, white pine, Eastern red cedar, fir, and redwood. These should also be properly dried.

Store split wood under cover to keep it dry. Even for short-term storage, be sure to keep wood a safe distance from the stove and keep it out of the areas around the stove used for refueling and ash removal.

Surface Thermometer is a Valuable Guide to Operation
An optional surface thermometer tells you when to adjust the air control, and when to refuel, Figure 2.8.

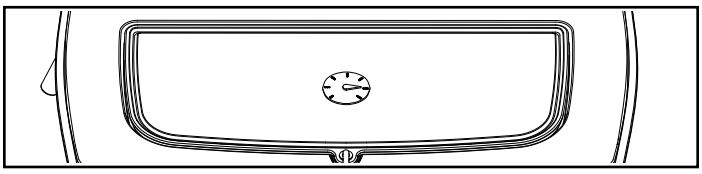

Figure 2.8 - Take temperature readings with a thermometer located in the middle of the griddle.

For example, when the thermometer registers at least 450°F (230°C) on the stove top after start-up you know the stove is hot enough and it may be time to close the damper if a sufficient ember bed has also been established. Note that the stove will warm up much sooner than the chimney, though; a warm chimney is the key to easy, effective stove operation. When thermometer readings drop below 350°F. (175°C) it's time to adjust the air control for a higher burn rate or to reload the stove. A temperature reading over 650°F. (340°C) is a sign to reduce the air supply to slow the burn rate.

Use the following temperature ranges as a guide:

- Readings in the 350°-500°F. (175°-260°C) range indicate low to medium heat output.
- 500°-600°F. (260°-315°C) readings indicate medium heat output.
- Readings of 600°-650°F. (315-340°C) indicate high heat output. Operating your Dauntless FlexBurn® continuously at griddle temperatures higher than 650° F (340°C) may damage the cast iron or enamel finish.

Use the Air Control Settings that Work Best for You
No single air control setting will fit every situation. Each installation will differ depending on the quality of the fuel, the amount of heat desired, and how long you wish the fire to burn; outdoor air temperature and pressure also affect draft.

The control setting also depends on your particular installation's "draft," or the force that moves air from the stove up through the chimney. Draft is affected by such things as the length, type, and location of the chimney, local geography, nearby obstructions, and other factors.

Too much draft may cause excessive temperatures in the Dauntless FlexBurn®, and could even damage the stove. On the other hand, too little draft can cause backpuffing into the room and/or the "plugging" of the chimney.

How do you know if your draft is excessively high or low? Symptoms of too much draft include an uncontrollable burn or a glowing-red stove part. Signs of weak draft are smoke leaking into the room through the stove or chimney connector joints or low heat output.

In some newer homes that are well-insulated and weather-tight, poor draft may result from an insufficient air supply in the house. In such instances, an open window near the stove on the windward side of the house can provide the combustion air supply needed.

Another option for getting more combustion air to the stove is to duct air directly from outside to the stove. In some areas provisions for outside combustion air are required in all new construction.

When first using the stove, keep track of the air control settings. You will quickly find that a specific setting will give you a fixed amount of heat. It may take a week or two to determine the amount of heat and the length of burn you should expect from various settings.

Most installations do not require a large amount of combustion air, especially if adequate draft is available. Do not for any reason attempt to increase the firing of your heater by altering the air control adjustment range outlined in these directions.

E. Ash Disposal

(Refer to the first page of the Operation section.)

DO NOT OPERATE THE STOVE WITH THE ASH DOOR OPEN. OPERATION WITH THE ASH DOOR OPEN CAN CAUSE AN OVER-FIRING CONDITION TO OCCUR. OVER-FIRING THE STOVE IS DANGEROUS AND CAN RESULT IN PROPERTY DAMAGE, INJURY OR LOSS OF LIFE.

Routine ash removal is important for ease of maintenance, and is important for the stove's durability. Remove ash before it reaches the top of the ash pan. Check the level at least once a day. Every few days, clear any ash from the outer edges of the firebox. Most of the ash will fall through the grate. Stir the ash with a shovel or poker so that it falls through the grate slots.

IMPORTANT: Check the level of ash in the ash pan before reloading the stove. If the ash level is close to the top edge of the pan, empty the pan according to this procedure:

- Open the damper.
- Open the griddle or front doors, and use a shovel or poker to stir excess ash through the ash slots in the grate down into the ash pan.
- Close the griddle or doors, and unlatch the ash door, Figure 2.9. It will pivot, swinging the ash pan out of the stove.

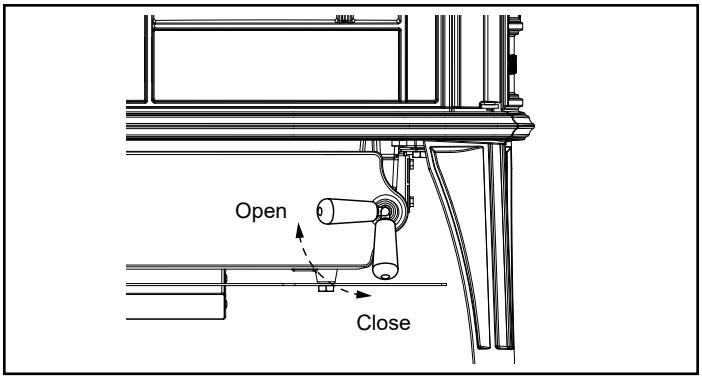

Figure 2.9- Turn the ashdoor handle clockwise to open and counterclockwise to close.

- Slide the cover onto the pan, making sure it is securely closed, Figure 2.10.

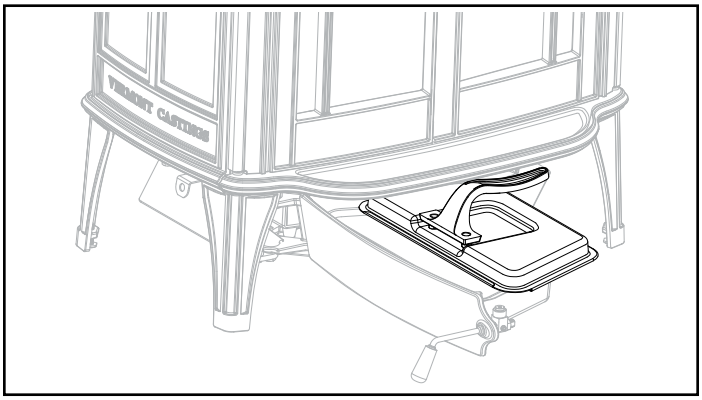

Figure 2.10 - Be sure the cover is securely attached before removing the ash pan.

- Remove the ash pan, making sure to keep it level.
- To keep the cover from sliding off and to keep ash from falling on the floor, do not tilt the ash pan forward.
- If the stove is in operation, close the ash door while disposing of the ash. You may need to lift the latch end of the door slightly to align the latch with the mating part on the stove bottom.
- Properly dispose of the ash in a metal container with a tight-fitting lid. Store the container outdoors away from all combustible material.
- Return the ash pan to its original position in the stove, and close and latch the ash door.

WARNING

Do not operate the stove with the ash door open. This will result in over-firing, and could cause damage to the stove, void the warranty, or even lead to a house fire.

Empty the ash pan regularly, typically every one to three days. The frequency will vary depending on how you operate your Dauntless FlexBurn®: ash will accumulate faster at higher heat outputs.

Removed ash should be placed outdoors in a metal container with a tight-fitting lid. Keep the closed container of ash on a noncombustible floor or on the ground, well away from all combustible materials, pending final disposal. If the ash is disposed of by burial in soil or otherwise locally dispersed, it should be kept in the closed container until all cinders have thoroughly cooled.

CAUTION

Never use your household or shop vacuum cleaner to remove ash from the stove; always remove and dispose of the ash properly.

F. Opacity (Visible Smoke)

This is the measure of how cleanly your appliance is burning. Opacity is measured in percent; 100% opacity is when an object is totally obscured by the smoke column from a chimney, and 0% opacity means that no smoke column can be seen. As you become familiar with your appliance, you should periodically check the opacity. This will allow you to know how to burn as nearly smoke-free as possible (goal of 0% opacity).

WARNING

Fire Risk

- DO NOT BURN GARBAGE OR FLAMMABLE FLUIDS SUCH AS GASOLINE, NAPTHA OR ENGINE OIL.
- Do NOT burn treated wood or wood with salt (driftwood).
- May generate carbon monoxide if burn material other than wood.

May result in illness or possible death.

WARNING

Fire Risk

Keep combustible materials, gasoline and other flammable vapors and liquids clear of appliance.

- Combustible materials may ignite.
- Do NOT store flammable materials in the appliance's vicinity.
- DO NOT USE GASOLINE, LANTERN FUEL, KEROSENE, CHARCOAL LIGHTER FLUID OR SIMILAR LIQUIDS TO START OR "FRESHEN UP" A FIRE IN THIS Appliance.
- Keep all such liquids well away from the appliance while it is in use.

CAUTION

When burning your first fire, you will experience smoke and odor from the appliance resulting from the curing of paint and burning off of any oils remaining from manufacturing.

OPENWINDOWSDURINGINITIALBURNTODISSIPATE SMOKE AND ODORS!

- Odors may be irritating to sensitive individuals.
- Smoke detectors may activate.

G. Negative Pressure

WARNING

Asphyxiation Risk

- Negative pressure can cause spillage of combustion fumes, soot and carbon monoxide.
- Appliance needs to draft properly for safety.

Negative pressure results from the imbalance of air available for the appliance to operate properly. It can be strongest in lower levels of the house.

Causes include:

- Exhaust fans (kitchen, bath, etc.)
- Range hoods
- Combustion air requirements for furnaces, water appliances and other combustion appliances
- Clothes dryers
- Location of return-air vents to furnace or air conditioning
- Imbalances of the HVAC air handling system
- Upper level air leaks such as:
  - Recessed lighting
  - Attic hatch
  - Duct leaks

To minimize the effects of negative air pressure:

- Install outside air to the stove with the intake facing prevailing winds during the heating season
- Ensure adequate outdoor air for <u>all</u> combustion appliances and exhaust equipment
- Ensure furnace and air conditioning return vents are not located in the immediate vicinity of the appliance
- Avoid installing the appliance near doors, walkways or small isolated spaces
- Recessed lighting should be a "sealed can" design
- Attic hatches weather stripped or sealed
- Attic mounted duct work and air handler joints and seams taped or sealed

H. Important Information

Creosote is a by-product of slow wood-burning. It's an organic tar that can condense in the flue if it is present in the exhaust, slow-moving, and cools to less than 290°F (130°C). Condensed creosote is volatile, and can generate chimney fires if it gets hot enough. All the features that affect chimney draft also affect creosote condensation - so use whatever combination of installation features and operational steps that will encourage good draft and minimize creosote production.

Because letting the exhaust cool off and slow down is one of the keys to creosote accumulation, it makes sense to line a chimney to match the stove's outlet size, for safety reasons as well as performance. Canadian law requires a matching liner to serve any stove or insert vented through a fireplace chimney; in the US, the National Fire Protection Association (NFPA) recommends a chimney liner if the flue is more than three times bigger (in square area) than the outlet on the stove or insert. Some localities enforce the NFPA guidelines as part of their building codes.

Fuel: Even the best stove installation will not perform well with poor fuel. The best fuel is hardwood that has air-dried 12-18 months. Softwood burns, but not as long as hardwood. 'Green' wood contains a lot of moisture; it will burn, but some of the heat potential is used to boil the extra moisture from the wood. This reduces the amount of heat that reaches your home and can contribute to a creosote problem. There are moisture meters available for firewood; you can also judge your wood by its appearance and weight (Moisture content of 20% or less is best). If you get it green, lift a piece and get a sense of its weight; it can lose a third or more of its weight as it dries. Also look at the ends of a log; as it dries it shrinks and often cracks. The more weathered and cracked a piece is, the drier it is.

Dry wood burns readily with a good chimney draft. But with modern stoves, wood can be too dry and too volatile. Smoke and combustible gases can 'gas out' from the wood quickly and densely enough to overload the combustion system. If you hear a rumbling or roaring noise (like a propane torch) from the stove, that is a sign that the stove is over-firing.

Back-puffing results when the fire produces volatile gases faster than the chimney draft pulls them out of the firebox. The gases back up in the firebox until they are concentrated enough and hot enough to ignite. If your stove back-puffs, the stove needs to cool down. You should open the damper to let the smoke rise to the flue more quickly, allow more air into the firebox, avoid big loads of firewood and check that the wood moisture is not too low.

Draft Testing: An easy way to test your chimney draft is to close the stove's damper, wait a few minutes to let the airflow stabilize, then see whether you can vary the strength of the fire by swinging the air control open and closed. Results are not always instant; you may need to wait a few minutes for a change in the air control setting to have an effect on the fire. If there's no change, then the draft isn't strong enough yet to let you close the damper, and you'll need to open it for awhile longer and manage the fire with the air inlet until the draft strengthens. If you keep track of your burning habits and relate them to their effects on the stove's operation, you'll be rewarded with good performance and a safe system.

Conclusion: Wood-burning is an art rather than a science. Once the stove and chimney system are in place, you can only vary your technique, mostly your timing, to achieve good results. If you keep track of your burning habits and relate them to their effects on the stove's operation, you'll be rewarded with good performance and years of reliable heating.

3 Maintenance

Keep Your Stove Looking New and Working Its Best
Let the fire in the stove go out and allow the stove to cool completely before beginning any maintenance procedure.

This wood appliance needs periodic inspection and repair for proper operation. It is against federal regulations to operate this wood appliance in a manner inconsistent with operating instructions in this manual.

Care of the Cast Iron Surface
An occasional dusting with a dry rag will keep the painted cast iron of your Dauntless FlexBurn® looking new.

The stove's paint can be touched up as needed. First, mask the areas, such as enameled parts, glass, or handles, around the spot to be painted. Clean the spot with a wire brush. Remove the griddle and set it aside. It is normal for the griddle to darken after use. You can clean it with a fine-bristle wire brush, or steel wool.

Then, touch up the stove with high temperature stove paint. Apply the paint sparingly; two light coats of paint are better than a single heavy one.

Care of the Porcelain Enamel Surface
Use a dry or slightly damp rag or soft brush to remove spills or stains. For difficult jobs that require a cleaning agent, use only a kitchen appliance cleaner or polish recommended for use on enamel surfaces.

If porcelain enamel becomes chipped or scratched during use, apply "enamel epoxy" to the damaged area and allow to dry. Once the epoxy has dried, sand the area to blend with surrounding area and apply appropriate color touch-up paint. Allow to dry completely before operating stove.

A. Cleaning the Glass & Replacement

Most of the carbon deposits on the glass will burn off during hot fires.

However, the ash residue that accumulates on the glass surface should be removed regularly to prevent etching. To clean the glass, follow this procedure:

- Be sure the glass is completely cool.
- Clean the glass with water or a cleaner made especially for this purpose. Do not use abrasive cleaners. Use cleaning agents sparingly and be sure to keep them off the outer surfaces of the stove.
- Rinse the glass thoroughly.
- Dry the glass completely.

Replace Broken Glass Immediately
Do not operate your stove if the glass in the doors is damaged.

If you need to replace the glass, use only the high temperature 5 mm ceramic glass supplied by Vermont Castings. Do not use substitutes.

Removing the Glass

1. Remove the right and left door assemblies by removing (4) 1/4-20 bolts located inside the door opening, Figure 3.1.

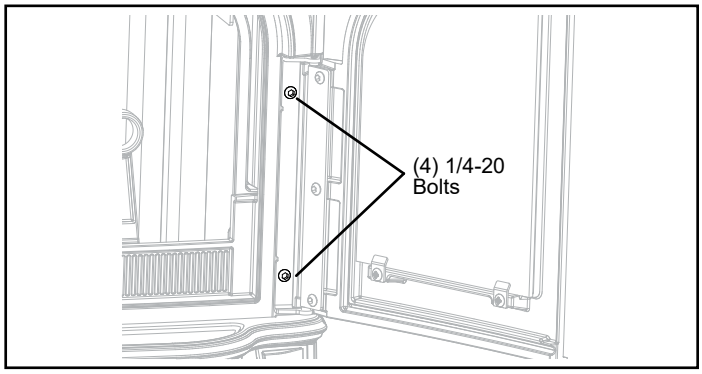

Figure 3.1

2. Place the doors face down on a padded work surface. Be especially careful with enameled doors.
3. Remove the screws that hold the glass retainer clips in place, and remove the clips.
4. Carefully lift the broken glass panel from the door.

Installing the Glass
Check the gasket around the window; it should be soft and resilient so that the glass will seal properly against the door. Replace the gasket if it has hardened or if it is compressed.

1. Center the glass on the gasket.
2. Secure the glass on both doors with the retainer clips. Tighten all screws, Figure 3.2.
3. Replace the doors on the stove.
4. Open and close the doors to check that they fit and work properly. Adjust as necessary.

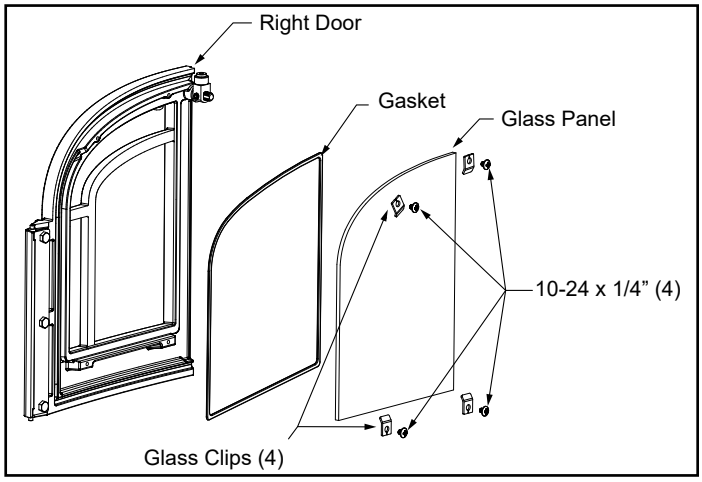

Figure 3.2 - Exploded view of the glass assembly for the right door.

B. Damper Adjustment (as Needed)

The tension on the Dauntless FlexBurn's damper is adjustable to compensate for compression of the gasket that seals the damper to the upper fireback. To adjust the damper:

1. Remove the griddle. Loosen the lock nut at the center of the damper, Figure 3.3.
2. Turn the pressure screw approximately one half turn clockwise with an Allen wrench provided with your stove.
3. Tighten the lock nut. Prevent the pressure screw from turning as you tighten the nut. Re-test the damper.

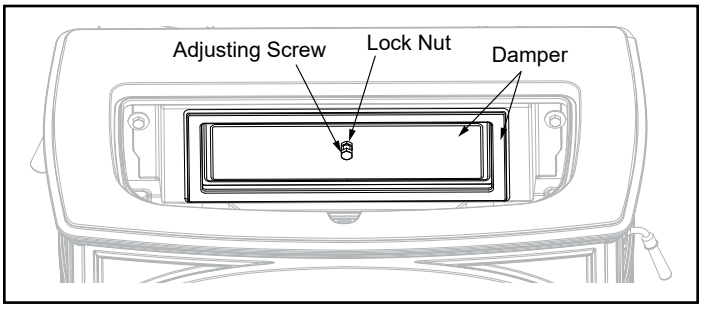

Figure 3.3 - Adjust the damper with the Allen wrench.

Tighten the Damper Handle as Needed

A handle on the left side of the stove controls the damper. The handle attaches to the damper rod with a set screw. Periodically check the set screw and tighten as necessary.

C. Door Latch Adjustment

The front door of the stove should close securely to prevent accidental opening and should close tightly to prevent air from leaking into the fire chamber. The door handle will be positioned vertically when the door is closed.

Over a period of time, the gasket around the door will compress and the latch may need adjustment. To adjust the handle, follow this procedure:

1. Remove and retain the lock nut with a 9/16" wrench, Figure 3.4.
2. Loosen the set screw with a 1/8" Allen wrench.
3. Rotate the pawl 180°. Replace the lock nut. Tighten the set screw, Figure 3.4.
4. Additional adjustment can be made by removing the flat washer. Or any combination of washer removal and/or pawl rotation.

Test the door seal. Close the door on a dollar bill and attempt to pull it free. If the bill is freed with little resistance, the gasket isn't snug enough at that spot. Continue to make small adjustments until the setting is right.

If additional adjusting of the latch does not enable the door to seal sufficiently in one area, try adjusting the gasket in that area. Pack more cement or a smaller diameter gasket into the channel beneath the gasket so the main gasket is raised and makes contact with the door frame. If this procedure doesn't solve the problem, replace the gasket. Instructions for gasket replacement are given later in this section.

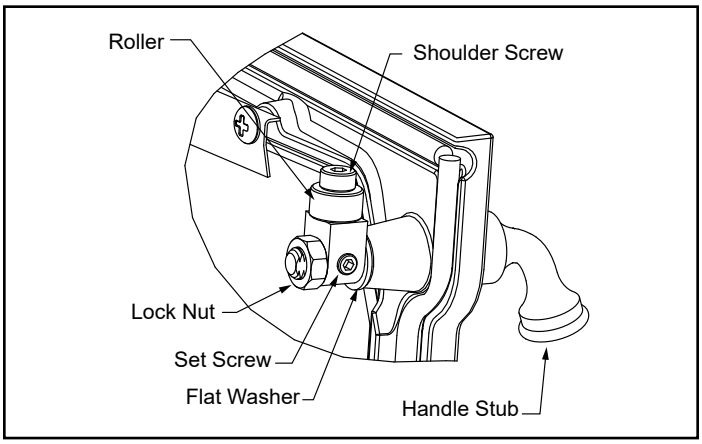

Figure 3.4 - Rotate pawl and/or remove flat washer to adjust latch.

D. Gasket Replacement (as needed)

Your Dauntless FlexBurn® uses fiberglass rope gaskets to make a tight seal between some parts. With use, particularly on moving parts, gaskets can become brittle and compressed and can begin to lose their effectiveness. These will need periodic replacement.

The sizes of replaceable gasket are listed below, along with their applications.

Gasket Diameter.....And the Parts it Seals

5/16" The griddle to the stove top (wire reinforced gasket)

3/8" The damper to the upper fireback

5/16" The front doors to the stove front; and the doors to each other.

5/16" The ash door to the front of the bottom panel

3/16" The outer glass panes to the door

If you need to change a gasket, first obtain an appropriate replacement from your Vermont Castings' Authorized Dealer.

Wait until the fire is out and the stove has cooled. Be sure to follow the standard safety procedure for working with dusty materials: wear safety goggles and a dust mask.

The procedure for replacing gaskets is the same, regardless of the gasket location. Follow these steps:

1. Remove the existing gasket by grasping an end and pulling firmly, Figure 3.5.

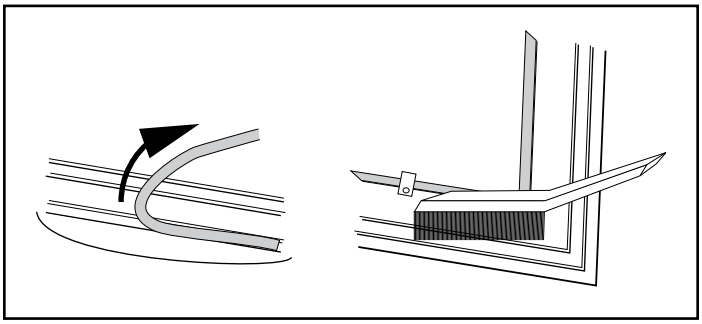

Figure 3.5 - Remove gasket then clean channel with wire brush.

2. Use a wire brush or the tip of a screwdriver to clean the channel of any remaining cement or bits of gasket. Remove stubborn deposits of cement with a cold chisel if necessary, Figure 3.5.
3. Determine the correct length of the appropriate-sized gasket by laying it out in the channel. Allow an extra 1-2" (25-50 mm), and mark the spot to be cut.
4. Remove the gasket from the channel, place it on a wood cutting surface, and cut it at the marked spot with a utility knife.

Twist the ends slightly to keep the gasket from unraveling.

5. Lay an unbroken 1/8" (3 mm) bead of silicone or cement in the newly-cleaned channel, Figure 3.6.

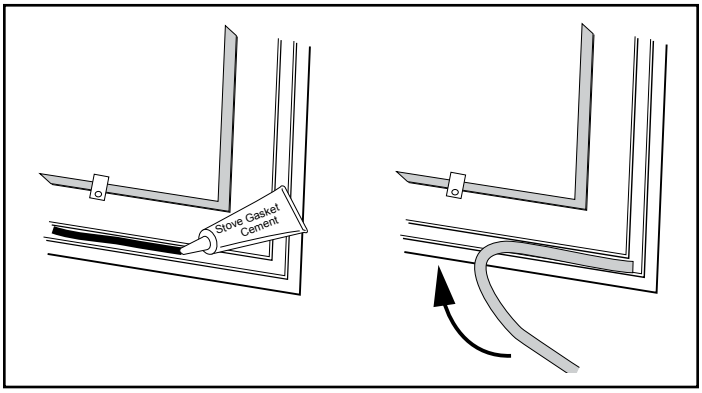

Figure 3.6 - Lay a bead of gasket silicone or cement then press gasket in place.

6. Starting at one end, press the gasket into the channel, Figure 3.6. Ensure a good joint where the gasket meets before trimming any excess. Do not overlap the gasket ends or leave ends with ragged edges.
7. Press the gasketed part firmly against its normal mating surface to seat the gasket evenly in its channel. Close and latch the door to do this, or tap other parts with the rubber mallet (or hammer/block of wood).
8. Clean any excess cement from around the channel, then let the cement that holds the new gasket dry thoroughly.
9. The stove's doors may need adjustment after you have regasketed them. Initially, it may require loosening the latch to accommodate the new gasket; after a few weeks, it may need tightening to compensate for compression of the new gasket.

All Gasketed Construction Gaskets

Other gaskets form seals between all other non-moving parts, but these are not subject to the same wear and deterioration as gaskets on moving parts. It is unlikely that you will ever need to replace these gaskets unless the involved parts are disassembled and then put back together. If this is the case, the job should be done only by a qualified service technician.

5/16" diameter gasket seals the following parts:

- The lower fireback to the back panel
- The left and right air plates (inner sides)
- All connections between the stove plates.

E. The Chimney System

Creosote

Your Dauntless FlexBurn® is designed to reduce creosote build-up significantly. However, regular chimney inspection and maintenance must still be performed. For safety, good stove performance, and to protect your chimney and chimney connector, inspect your chimney and chimney connector on a regular schedule. Clean the system if necessary. Failure to keep the chimney and connector system clean can result in a serious chimney fire.

⚠ WARNING

Inspect and Clean Chimney Frequently – Under certain conditions of use, creosote buildup may occur rapidly.

When wood is burned slowly, it produces tar, organic vapors and moisture that combine to form creosote. The creosote vapors condense in the relatively cool chimney flue of a slow-burning fire. As a result, creosote residue accumulates on the flue lining. When ignited, this creosote makes an extremely hot fire within the flue system that can damage the chimney and overheat adjacent combustible material. If a significant layer of creosote has accumulated —1/8" (3 mm) or more — it should be removed to reduce the risk of a chimney fire.

You can never be too safe. Contact your local fire authority for information on what to do in the event of a chimney fire, and have a clearly understood plan on how to handle one.

If you do experience a chimney fire, act promptly to:

- Close the damper and air control lever.
- Get everyone out of the house.
- Call the Fire Department.

Inspect the system every two weeks during the heating season as part of a regular maintenance schedule. To inspect the chimney, let the stove cool completely. Then, using a mirror and a strong light, sight up through the flue collar into the chimney flue. If you cannot inspect the flue system in this fashion, the stove must be disconnected to provide better viewing access.

Clean the chimney using a brush the same size and shape as the flue liner. Flexible fiberglass rods are used to run the brush up and down the liner, causing any deposits to fall to the bottom of the chimney where they can be removed through the clean-out door.

Clean the chimney connector by disconnecting the sections, taking them outside, and removing any deposits with a stiff wire brush. Reinstall the connector sections after cleaning, being sure to secure the joints between individual sections with sheet metal screws.

If you cannot inspect or clean the chimney yourself, contact your local Vermont Castings dealer or a professional chimney sweep.

Maintenance Schedule - The Stove

Daily:

- Clear any ash build-up from around the air holes and combustion flow path in the lower fireback.
- Ashes should be removed before they reach the top of the ash pan. Check accumulation at least once a day.
- Keep the area around the stove clear of any combustible materials such as wood, furniture or clothing.

Two Months:

- Check door handle to be sure it is working properly. Gasketing becomes compressed after a period of time. Adjust handle tightness if necessary.
- Check leg bolts and heat shield screws; tighten if necessary.
- **If installed:** Inspect the combustor for fly ash accumulation and physical damage. Clean the combustor as needed.

Annual Spring Cleaning:

- Check gasketing for wear, and replace if necessary.
- Remove ashes from the ash pan and replace with a moisture absorbing material (such as kitty litter) to keep the interior of the stove dry.
- Clean the dust from the inner sides of bottom, rear or pipe heat shields if your stove is equipped with them. Clean surfaces are better heat reflectors than dirty surfaces.
- Touch up the black paint.
- Inspect for and remove ash build-up behind the combustion package. This should be done in conjunction with annual cleaning of the chimney connector. Inspect the passage behind the combustion package (a mirror will be helpful) and vacuum away ash using a flexible vacuum hose inserted in the passage, Figure 3.7.

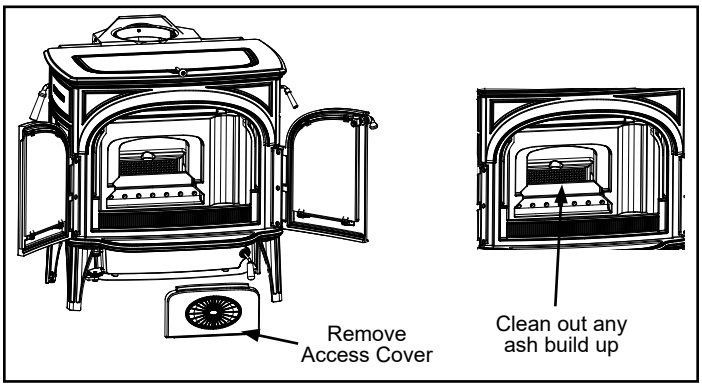

Figure 3.7 - Inspect and clean out ash accumulation behind the combustion system.

The Chimney Connector

Two Weeks

- Inspect the chimney connector and chimney. Clean if necessary.

Two Months:

- Inspect the chimney and chimney connector. Pay particular attention to the horizontal runs of chimney connector, and the elbows. Clean the system if necessary.

Annual Spring Cleaning:

- Disassemble the chimney connector and take it outdoors for inspection and cleaning. Replace weak sections of connector.
- Inspect the chimney for signs of deterioration. Repairs to a masonry chimney should be made by a professional mason. Replace damaged sections of prefabricated chimney. Your local Vermont Castings dealer or a chimney sweep can help determine when replacement is necessary.
- Thoroughly clean the chimney.

F. The Catalytic Element (Optional)

⚠ CAUTION

BURN UNTREATED WOOD ONLY. OTHER MATERIALS SUCH AS WOOD PRESERVATIVES, METALS, FOILS, COAL, PLASTIC, GARBAGE, SULPHUR, OR OIL, MAY DAMAGE THE CATALYST.

The Dauntless FlexBurn® is designed to burn equally well with or without a catalytic combustor (Part #30007430), however higher efficiencies will be achieved when operating with the catalyst. The following section only applies if the catalytic performance pack has been purchased and installed. The Dauntless FlexBurn® is designed and certified to function with or without a catalyst. In the event the combustor becomes non-functioning the combustor can either be replaced or removed completely.

If a non-active catalyst is left installed in the unit, it will burn sluggishly and produce noticeable smoke at the outlet of the venting system. The simplest situation in that case is to remove the deactivated catalyst and operate the unit as non-catalytic. The catalyst can then be replaced as time allows without producing a smoky burn or low heat output.

Under normal operating conditions, the catalytic combustor should remain active for five to seven years (depending on the amount of wood burned). However, it is important to monitor the combustor periodically to ensure that it is functioning properly, as well as to determine when it needs to be replaced.

When to Suspect a Combustor Problem

The best way to evaluate the performance of your Dauntless FlexBurn's combustor is to observe the amount of smoke leaving the chimney — both when the combustor has "lighted-off" and when it has not. Follow these steps:

- With a fire going and the combustor properly activated and the damper closed to route smoke through it as described in the Operation Section, go outside and observe the smoke leaving the chimney.
- Then, open the stove damper and once again check the smoke leaving the chimney.

You should see significantly more smoke when the stove damper is open and exhaust does not pass through the combustor. However, be careful not to confuse smoke with steam from wet wood. Steam dissipates in the air quickly; smoke does not. Remember that a hot stove with a 2"-3" established coal bed is required for catalytic combustion to occur.

If this test indicates a problem, consider other possible factors as well, such as the weather or a change in the quality of your fuel. In warm weather, draft is weaker than it is in colder winter weather, and fires can burn sluggishly. Small, hot fires are a good solution under these conditions.

NOTE

Burning "green" (insufficiently seasoned) wood will result in poorer performance than burning properly seasoned fuel. Reloading with green wood can also thermal shock the catalyst, resulting in cracking, or the eventual fallout, of the metal honeycomb substrate. You may have to run your stove hotter (more air) to achieve acceptable performance using green or wet wood.

Also, consider any changes in your operating routine.

Once you have ruled out any other possible causes for a decline in performance, inspect and clean the combustor if necessary. Be sure to protect any surface you use for setting the stove parts aside.

Inspecting the Combustor

Remove access door and inner firebrick. Remove the catalytic combustor by lifting up and pulling towards you, Figure 3.8.

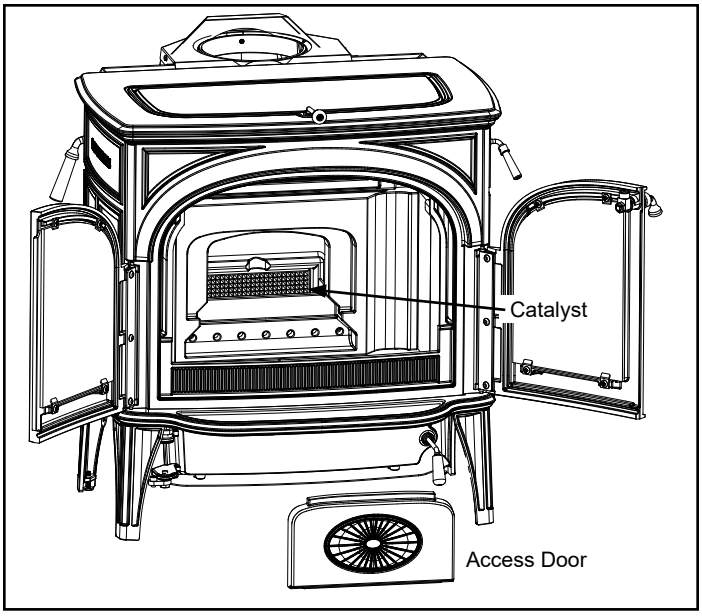

Figure 3.8 - Inspect the catalytic combustor.

Cleaning the Optional Combustor

1. Check the combustors honeycomb-like catalyst for a buildup of fly ash. If any is evident, take the catalyst outside and clean it by blowing air gently through it. Do not push anything through the honeycomb; the combustor should be cleaned by forcing air through the combustor to remove fly ash using a vacuum or can of compressed air.
2. Inspect the catalyst for damage or degradation. Although small hairline cracks will not affect performance, the catalyst should be essentially intact. If the catalyst is broken in pieces or has sections missing, it should be removed or replaced. Call your local Vermont Castings Authorized Dealer for a replacement catalyst.
3. If the catalyst is in good condition and clean, re-install it in the stove and replace the refractory access door.

4 Troubleshooting Guide

With proper installation, operation, and maintenance your wood appliance will provide years of trouble-free service. If you do experience a problem, this troubleshooting guide will assist you or a qualified service person in the diagnosis of a problem and the corrective action to be taken.

Start Fire Problems	Possible Cause	Solution
• Can not get fire started • Excessive smoke spillage • Burns too slowly • Not enough heat output	Not enough kindling/paper or no kindling/paper	Use dry kindling, more paper. Arrange kindling & wood for air movement.
	Not enough air for fire to ignite	Check for restricted termination cap
		Check for blockage of outside air kit (if installed).
		Check for flue blockage.
		Pre-warm flue before starting fire (refer to Building a Fire Section).
		Check for adequate vent height (refer to Chimney Height Section).
		Refer to Negative Pressure section
	Wood condition is too wet, too large	Use dry, seasoned wood (refer to Seasoned Wood Section).
	Bed of coals not established before adding wood	Start with paper & kindling to establish bed of coals (refer to Building a Fire Section).
	Flue blockage such as birds' nests or leaves in termination cap	Have chimney inspected for creosote and cleaned by a certified chimney sweep.
	Down draft or negative pressure Competition with exhaust devices	Do not use exhaust fans during start-up (refer to Negative Pressure Section).
Fire burns too fast	Extremely dry or soft wood	Mix in hardwood.
		Mix in larger pieces of wood after fire is established.
	Overdrafting	Check for correct vent height; too much vertical height creates overdrafting.
		Check location of vent termination (refer to Chimney Termination Requirement Section).
Low Heat Output	Coal Bed too small	Open damper. Establish deeper coal bed and move coals to the rear of the firebox.
Excessive Coal Bed	Operating on high for extended periods	Reduce burn rate and allow coals to burn down before reloading.

Contact your dealer for additional information regarding operation and troubleshooting.
Visit www.vermontcastings.com to locate a dealer.

5 Reference Materials

A. Service & Maintenance Log

Date of Service	Performed By	Description of Service

B. Service Parts & Accessories

VERMONT CASTINGS™ **Service Parts** **Defiant CAT-C**

Beginning Manufacturing Date: Oct 2019
Ending Manufacturing Date: Active

1975-CAT-C (Classic Black)
1976-CAT-C (Biscuit)
1977-CAT-C (Majolica Brown)
1979-CAT-C (Bordeaux)
1980-CAT-C (Twilight)
1975T-CAT-C (Classic Black w/Transition Doors)

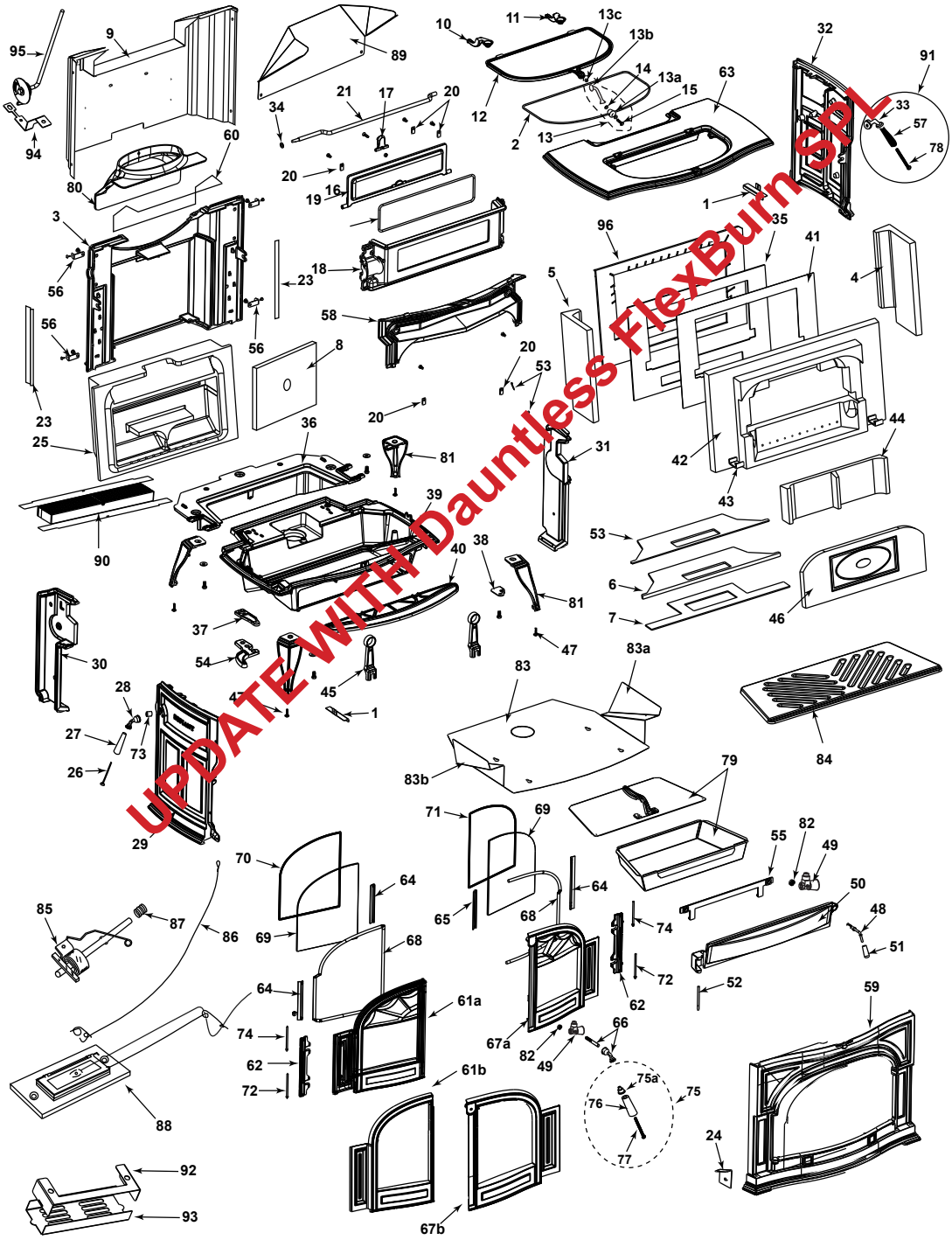

UPDATE WITH Dauntless FlexBurn SPL

Part number list on following page.

06/19

IMPORTANT: THIS IS DATED INFORMATION. Parts must be ordered from a dealer or distributor. **Hearth and Home Technologies does not sell directly to consumers**. Provide model number and serial number when requesting service parts from your dealer or distributor.

ITEM	DESCRIPTION	COMMENTS	PART NUMBER	Stocked at Depot
1	Brick Support Bracket		30005279	
2	Griddle Gasket	10 Ft	1-00-1203668	Y
3	Back		30005242A	
4	Refractory, Right End		30005206	
5	Refractory, Left End		30005207	
6	Refractory Support		30005233	
7	Gasket, Cast Base		SRV8344-000	
8	Back Insulation Board		30005269	
9	Outer Back		30005249	
10	Griddle Quadrant, Left		30002399A	
11	Griddle Quadrant, Right		30002401A	
12	Griddle		30005257A	
13	Complete Griddle Handle Assembly		30002775	Y
13a	Griddle Handle, Wood		1600661	Y
13b	Griddle Handle, CRS-BN1		30002715	
13c	Nut, Hex 1/4-20	Pkg of 10	1203210-10	
14	Griddle Handle Bushing	Pkg of 10	1201900-10	
15	Griddle Handle Bolt	Pkg of 10	1201308-10	
16	Damper Gasket	15 Ft	1-00-1203588	Y
17	Damper Ramp		1300643	
18	Damper Housing		30002821A	
19	Damper		30002816	
20	Damper Tab	Pkg of 10	1601488-10	
21	Damper Rod		1600065	
23	Gasket, Back Refractory	10 Ft	1-00-30005270	
24	Rheostat Bracket		30002863	
25	Refractory, Engine - E/D		30005202	
26	Damper Handle Screw	Pkg of 10	1201310-10	
27	Damper Handle		1600664	Y
28	Damper Handle w/Screw Assembly		30002720A	Y
29	Left Side	Classic Black	30002832A	
		Biscuit	SRV30002872	
		Bordeaux	SRV30006697	
		Majolica Brown	SRV30004834	
		Twilight	SRV30007126	
30	Left Air Manifold		30002818	
31	Right Air Manifold		30005243	

UPDATE WITH Dauntless FlexBurn SPL

Additional service part numbers appear on following page.

IMPORTANT: THIS IS DATED INFORMATION. Parts must be ordered from a dealer or distributor. **Hearth and Home Technologies does not sell directly to consumers**. Provide model number and serial number when requesting service parts from your dealer or distributor.

ITEM	DESCRIPTION	COMMENTS	PART NUMBER	Stocked at Depot
32	Right Side	Classic Black	30002831A	
		Biscuit	SRV30002871	
		Bordeaux	SRV30006698	
		Majolica Brown	SRV30004835	
		Twilight	SRV30007127	
33	Thermostat Handle Base		30002716	Y
34	Washer Damper Rod	Pkg of 10	30007257-10	
35	Refractory Gasket Plate, S/S		SRV8000-008	
36	Inner Bottom		30005241	
37	Top Ashdoor Hinge		1-00-30002836	
38	Door Handle Bracket		30002844	
39	Bottom		30005240A	
40	Ashlip	Classic Black	30002811A	
		Biscuit	SRV30002870	
		Bordeaux	SRV30006696	
		Majolica Brown	SRV30004833	
		Twilight	SRV30007125	
41	Gasket, Fireback		30005209	
42	Refractory, Fireback		30005203	
43	Retainer, Fireback Refractory		30005248	
44	Refractory, Inner Cover		30005205	Y
45	Andiron		30002827A	Y
46	Refractory, Access Cover		30007252	
47	Leg Leveler	Pkg of 10	1201745-10	
48	Ashdoor Handle Shaft		30005301	
49	Pawl Assembly, 3/4 Short Adj.		30005157	Y
49a	Spring Washer	Pkg of 10	63D0069-10	
50	Ashdoor		30002810A	
50a	Ashdoor Gasket	15 Ft	1-00-1203589	
51	Ashdoor Handle, Wood		1600663	Y
52	Hinge Hardware		1-00-2826	
53	Gasket, Ceramic Fiber		SRV30007513	
54	Ashdoor Bottom Hinge Support		1-00-1300642	
55	Ashpan Bracket		30001908	
56	Rear Side Bracket		30002845	
57	Thermostat Handle		1600660	Y
58	Airwash Manifold, Front		30005244	

UPDATE WITH Dauntless FlexBurn SPL

Additional service part numbers appear on following page.

IMPORTANT: THIS IS DATED INFORMATION. Parts must be ordered from a dealer or distributor. **Hearth and Home Technologies does not sell directly to consumers**. Provide model number and serial number when requesting service parts from your dealer or distributor.

ITEM	DESCRIPTION	COMMENTS	PART NUMBER	Stocked at Depot
59	Front	Classic Black	30002830A	
		Biscuit	SRV30002873	
		Bordeaux	SRV30006699	
		Majolica Brown	SRV30004836	
		Twilight	SRV30007128	
60	Flue Collar Gasket		1-00-30002422	
61a	Left Door (Shell Enamel Parts)	Classic Black	30002813A	
		Biscuit	SRV30002876	
		Bordeaux	SRV30006703	
		Majolica Brown	SRV30004842	
		Twilight	SRV30007132	
	Left Door Sub Assembly (Shell Enamel Parts) (Does not contain glass or glass gasket)	Classic Black	30002854	
		Biscuit	30002879	
		Bordeaux	30006773	
		Majolica Brown	30004840	
		Twilight	30007133	
61b	Left Door (Transition Door Enamel)	Classic Black	30007091A	
		Biscuit	SRV30007093	
		Bordeaux	SRV30007097	
		Majolica Brown	SRV30007095	
		Twilight	SRV30007109	
	Left Door Sub Assembly (Transition Door Enamel)	Classic Black	30007175	
		Biscuit	30007177	
		Bordeaux	30007179	
		Majolica Brown	30007181	
		Twilight	30007183	
62	Door Hinge Strip		1300645A	
63	Top	Classic Black	30002834A	
		Biscuit	SRV30002874	
		Bordeaux	SRV30006700	
		Majolica Brown	SRV30004837	
		Twilight	SRV30007129	
64	Glass Clip		30001715	
65	Glass Clip (Right Door Only)		30001716	
66	Front Door Handle and Shaft		30002717	Y

UPDATE WITH Dauntless FlexBurn SPL

Additional service part numbers appear on following page.

Beginning Manufacturing Date: Oct 2019
Ending Manufacturing Date: Active

IMPORTANT: THIS IS DATED INFORMATION. Parts must be ordered from a dealer or distributor. **Hearth and Home Technologies does not sell directly to consumers**. Provide model number and serial number when requesting service parts from your dealer or distributor.

ITEM	DESCRIPTION	COMMENTS	PART NUMBER	Stocked at Depot
67a	Right Door (Shell Enamel Parts)	Classic Black	30002812A	
		Biscuit	SRV30002875	
		Bordeaux	SRV30006702	
		Majolica Brown	SRV30004841	
		Twilight	SRV30007131	
	Right Door Sub Assembly (Shell Enamel Parts) (Does not contain glass or glass gasket)	Classic Black	30002853	
		Biscuit	30002878	
		Bordeaux	30006772	
		Majolica Brown	30004839	
		Twilight	30007134	
67b	Right Door (Transition Door Enamel)	Classic Black	30007090A	
		Biscuit	SRV30007092	
		Bordeaux	SRV30007096	
		Majolica Brown	SRV30007094	
		Twilight	SRV30007108	
	Right Door Sub Assembly (Transition Door Enamel)	Classic Black	30007176	
		Biscuit	30007178	
		Bordeaux	30007180	
		Majolica Brown	30007182	
		Twilight	30007184	
68	Door Gasket	15 Ft	1-00-7000910	Y
69	Glass Gasket	10 Ft	1-00-1186258229	Y
70	Left Door Glass		30005247	
71	Right Door Glass		30005247	
72	Lower Door Hinge Pin		30002727	Y
73	Spacer (For Damper Rod)	Pkg of 10	1201779-10	
74	Upper Door Hinge Pin		30002727	Y
75	Complete Handle Assembly		30004175K	Y
75a	Handle Base Stub		30002714	Y
76	Wood Handle		1600664	Y
77	Handle Bolt	Pkg of 10	1201310-10	
78	Thermostat Handle Botl	Pkg of 10	1201243-10	
79	Ash Pan Assembly		30001690	
80	Flue Collar	Classic Black	30001576A	
		Biscuit	SRV30002947	
		Bordeaux	SRV30006701	
		Majolica Brown	SRV30004815	
		Twilight	SRV30007130	

UPDATE WITH Dauntless FlexBurn SPL

Additional service part numbers appear on following page.

IMPORTANT: THIS IS DATED INFORMATION. Parts must be ordered from a dealer or distributor. **Hearth and Home Technologies does not sell directly to consumers**. Provide model number and serial number when requesting service parts from your dealer or distributor.

ITEM	DESCRIPTION	COMMENTS	PART NUMBER	Stocked at Depot
81	Leg	Classic Black	30002835A	
		Biscuit	SRV30002877	
		Bordeaux	30006695A	
		Majolica Brown	30004843A	
		Twilight	30007124	
82	Jam Nut, Hex Head	Pkg of 10	1203290-10	
83	Bottom Heat Shield		30005037	
83a	Bottom Heat Shield, Right Wing		30005038	
83b	Bottom Heat Shield, Left Wing		30005039	
84	Grate Bottom		30005234A	
85	Thermostat Assembly		5005470	Y
86	Thermostat Cable		5005471	Y
87	Thermostat Friction Spring	Pkg of 10	1201846-10	
88	Primary Air Valve Assembly		30005275	
89	Heat Plate Vertical Flue		30005265	
90	Catalyst, Ceramic		30006623	
91	Thermostat Handle Assembly		30007067	
92	Primary Air Cover		30007069	
93	Primary Air Base		30007071	
94	Temperature Probe		30007274	
95	Braket, Temperature Probe		30007278	
96	Gasket, Slotted Refractory		SRV8344-001	
	Finish Bag		SRV8000-007	
	Warming Shelf Kit	Classic Black	0000210	
		Biscuit	0000211	
		Bordeaux	0000218	
		Majolica Brown	0000217	
		Twilight	0000219	
	Shelf	Classic Black	30002823A	
		Biscuit	SRV30002900	
		Bordeaux	SRV30006704	
		Majolica Brown	SRV30004844	
		Twilight	SRV30007135	
	Dragon Bracket	Classic Black	1302220A	
		Biscuit	SRV30002948	
		Bordeaux	30006690A	
		Majolica Brown	SRV30004818	
		Twilight	SRV30007075	
	Bracket, Left		30002478A	
	Bracket, Right		30002479A	

UPDATE WITH Dauntless FlexBurn SPL

C. Contact Information

VERMONT CASTINGS

CONTACT INFORMATION

Hearth & Home Technologies
352 Mountain House Road
Halifax, PA 17032

Please contact your Vermont Castings dealer with any questions or concerns.

For the number of your nearest Vermont Castings dealer log onto www.vermontcastings.com

CAUTION

DO NOT DISCARD THIS MANUAL

- Important operating and maintenance instructions included.
- Read, understand and follow these instructions for safe installation and operation.
- Leave this manual with party responsible for use and operation.

DO NOT DISCARD

We recommend that you record the following pertinent information for your heating appliance.

Date purchased/installed: _____

Serial Number: _____ Location on appliance: _____

Dealership purchased from: _____ Dealer phone: _____

Notes: _____

_____

_____

_____

This product may be covered by one or more of the following patents: (United States) 5341794, 5263471, 6688302, 7216645, 7047962 or other U.S. and foreign patents pending.

HEARTH & HOME technologies®

Installation Manual

Installation & Appliance Set-Up

INSTALLER: Leave this manual with party responsible for use and operation.
OWNER: Retain this manual for future reference.

NOTICE: DO NOT DISCARD THIS MANUAL

VERMONT CASTINGS

Dauntless FlexBurn® Wood Stove

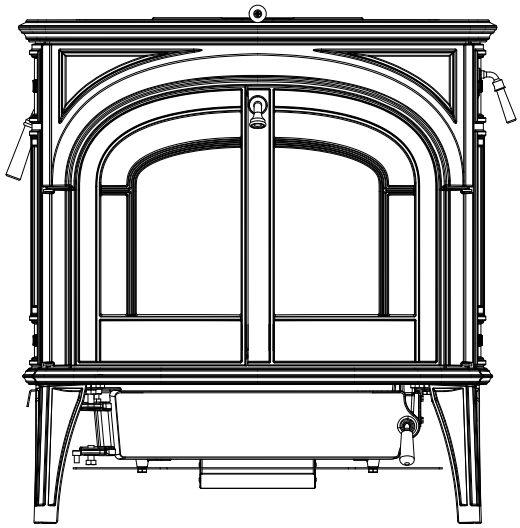

Installation and service of this appliance should be performed by qualified personnel. Hearth & Home Technologies recommends HHT Factory Trained or NFI certified professionals.

hearthED FACTORY TRAINING Fuel Your Fire

NFI NATIONAL FIREPLACE INSTITUTE A CERTIFICATION AGENCY

WARNING

If the information in these instructions is not followed exactly, a fire may result causing property damage, personal injury, or death.

- Do not store or use gasoline or other flammable vapors and liquids in the vicinity of this or any other appliance.
- Do not over fire - If appliance or chimney connector glows, you are over firing. Over firing will void your warranty.
- Comply with all minimum clearances to combustibles as specified. Failure to comply may cause house fire.

WARNING

HOT SURFACES!
Glass and other surfaces are hot during operation AND cool down.
Hot glass will cause burns.

- Do not touch glass until it is cooled
- NEVER allow children to touch glass
- Keep children away
- CAREFULLY SUPERVISE children in same room as fireplace.
- Alert children and adults to hazards of high temperatures
- **High temperatures may ignite clothing or other flammable materials.**
- Keep clothing, furniture, draperies and other flammable materials away.

NOTE

To obtain a French translation of this manual, please contact your dealer or visit www.vermontcastings.com

Pour obtenir une traduction française de ce manuel, s'il vous plaît contacter votre revendeur ou visitez www.vermontcastings.com

⚠ Safety Alert Key:

- ***DANGER!*** Indicates a hazardous situation which, if not avoided will result in death or serious injury.
- ***WARNING!*** Indicates a hazardous situation which, if not avoided could result in death or serious injury.
- ***CAUTION!*** Indicates a hazardous situation which, if not avoided, could result in minor or moderate injury.
- ***NOTICE:*** Indicates practices which may cause damage to the appliance or to property.

TABLE OF CONTENTS

1 Product Listing and Important Safety Information

A. Appliance Certification 3
B. BTU & Efficiency Specifications 3
C. Mobile Home Approved (USA ONLY) 3
D. Glass Specifications 3
E. Non-Combustible Materials 4
F. Combustible Materials 4
G. California 4

2 Getting Started

A. Design and Installation Considerations 5
B. Fire Safety 5
C. Negative Pressure 5
D. Tools And Supplies Needed 6
E. Inspect Appliance and Components 6
F. Install Checklist 7

3 Dimensions and Clearances

A. Appliance Dimensions 8
B. Hearth Protection Requirements 9
C. Clearances to Combustibles 10
D. Locating Your Appliance & Chimney 11
E. Chimney Termination Requirements 11
F. Chimney Location (2-10-3 Rule) 12

4 Chimney Systems

A. Venting & Draft Management 13
B. Venting Components 14
C. Chimney Systems 14
D. Installing Chimney Components 16

5 Appliance Set-Up

A. Removing Unit From Skid 17
B. Assembly 17
C. Installing Optional Catalyst 18
D. Smoke and CO Detectors & Safety Tips 19
E. Reversible Flue Collar 20
F. Outside Air Kit Installation 20

6 Mobile Home Installation 22

➔ = Contains updated information

1 Product Listing and Important Safety Information

A. Appliance Certification

MODEL:	Dauntless FlexBurn® Wood Stove
LABORATORY:	OMNI Test Laboratories, Inc
REPORT NO.	0061WS104E, 0061WS104S
TYPE:	Solid Fuel Type Room Heaters
STANDARD(s):	ASTM E2515, ASTM E3053, UL-1482, ULC-S627, B415.1

B. BTU & Efficiency Specifications

EPA Report #:	(without catalyst) (catalytic)
EPA Certified Emissions:	1.1 g/hr (without catalyst) 1.2 g/hr (catalytic)
***LHV Tested Efficiency:**	81.6% (without catalyst) 82.6% (catalytic)
****HHV Tested Efficiency:**	76.9% (without catalyst) 77.9% (catalytic)
*****EPA BTU Output:**	12,250 - 49,430 (without catalyst)
	14,520 - 41,940 (catalytic)
******Peak BTU/Hour Output:**	54,100 (without catalyst) 48,300 (catalytic)
Vent Size:	6 Inch (152 mm)
Firebox Size:	1.8 cu. ft.
Recommended Length:	16”
Max. Wood Length:	18”
Fuel Orientation:	East, West
Fuel	Seasoned Cordwood (20% moisture)
*Weighted average LHV efficiency using Douglas Fir dimensional lumber and data collected during EPA emissions test.	
**Weighted average HHV efficiency using Douglas Fir dimensional lumber and data collected during EPA emissions test.	
***Efficiencies are based on test results calculated using B415; these calculated efficiencies are then used to calculate output BTU’s.	
****A peak BTU out of the appliance calculated using the maximum first hour burn rate from the High EPA Test and the BTU content of cord wood (8600) times the efficiency.	

The Vermont Castings Dauntless FlexBurn® Wood Appliance meets the U.S. Environmental Protection Agency Certified to comply with the 2020 particulate emission standards using cord wood.

This wood appliance needs periodic inspection and repair for proper operation. It is against federal regulations to operate this wood appliance in a manner inconsistent with operating instructions in this manual.

C. Mobile Home Approved (USA ONLY)

- This appliance is approved for mobile home installations in the USA when not installed in a sleeping room and when an outside combustion air inlet is provided.
- The structural integrity of the mobile home floor, ceiling, and walls must be maintained.
- The unit must be bolted to the floor. This can be done using an appropriate fastener for the application.
- The appliance must be properly grounded to the frame of the mobile home with #8 copper ground wire, and chimney must be listed to UL103 HT or a listed UL-1777 full length six” (152mm) diameter liner must be used.
- Mobile Home Bracket Kit #2-00-586189 must be installed in a mobile home installation.

D. Glass Specifications

This appliance is equipped with 5mm ceramic glass. Replace glass only with 5mm ceramic glass. Please contact your dealer for replacement glass.

WARNING

Fire Risk.
Hearth & Home Technologies disclaims any responsibility for, and the warranty will be voided by, the following actions:

- Installation and use of any damaged appliance.
- Modification of the appliance.
- Installation other than as instructed by Hearth & Home Technologies.
- Installation and/or use of any component part not approved by Hearth & Home Technologies.
- Operating appliance without fully assembling all components.
- Operating appliance without legs attached (if supplied with it).
- Do NOT Over fire - If appliance or chimney connector glows, you are over firing.

Any such action that may cause a fire hazard.

NOTE: This installation must conform with local codes. In the absence of local codes you must comply with the UL1482-11, UL 737-11, (UM) 84-HUD and NPFA211 in the U.S.A. and the ULC S627-00 and CAN/CSA-B365 Installation Codes in Canada. **NOT APPROVED FOR MOBILE HOME INSTALLATIONS IN CANADA!**

Improper installation, adjustment, alteration, service or maintenance can cause injury or property damage.

For assistance or additional information, consult a qualified installer, service agency or your dealer.

NOTE: Hearth & Home Technologies, manufacturer of this appliance, reserves the right to alter its products, their specifications and/or price without notice.

Hearth & Home Technologies WILL NOT warranty appliances that exhibit evidence of over-firing. Evidence of over-firing includes, but is not limited to:

- Warped Damper
- Deteriorated refractory
- Deteriorated interior components

E. Non-Combustible Materials

Material which will not ignite and burn, composed of any combination of the following:

- Steel	- Plaster
- Brick	- Iron
- Concrete	- Tile
- Glass	- Slate

Materials reported as passing **ASTM E 136, Standard Test Method for Behavior of Metals, in a Vertical Tube Furnace of 750° C.**

F. Combustible Materials

Material made of/or surfaced with any of the following materials:

- Wood	- Compressed Paper
- Plant Fibers	- Plastic
- Plywood/OSB	- Sheet Rock (drywall)

Any material that can ignite and burn: flame proofed or not, plastered or non-plastered.

G. California

WARNING

This product and the fuels used to operate this product (wood), and the products of combustion of such fuels, can expose you to chemicals including carbon black, which is known to the State of California to cause cancer, and carbon monoxide, which is know to the State of California to cause birth defects or other reproductive harm. For more information go to: www.P65Warnings.ca.gov

2 Getting Started

A. Design and Installation Considerations

Consideration must be given to:

- Safety
- Convenience
- Traffic flow
- Chimney and chimney connector required

It is a good idea to plan your installation on paper, using exact measurements for clearances and floor protection, before actually beginning the installation. If you are not using an existing chimney, place the appliance where there will be a clear passage for a factory-built listed chimney through the ceiling and roof.

We recommend that a qualified building inspector and your insurance company representative review your plans before and after installation.

If this appliance is in an area where children may be near it is recommended that you purchase a decorative barrier to go in front of the appliance. Remember to always keep children away while it is operating and do not let anyone operate this appliance unless they are familiar with these operating instructions.

CAUTION

Check building codes prior to installation.

- Installation MUST comply with local, regional, state and national codes and regulations.
- Consult insurance carrier, local building, fire officials or authorities having jurisdiction about restrictions, installation inspection, and permits.

WARNING

Asphyxiation Risk

- DO NOT CONNECT THIS APPLIANCE TO A CHIMNEY FLUE SERVICING ANOTHER APPLIANCE.
- DO NOT CONNECT TO ANY AIR DISTRIBUTION DUCT OR SYSTEM.

May allow flue gases to enter the house.

B. Fire Safety

To provide reasonable fire safety, the following should be given serious consideration:

1. Install at least one smoke detector on each floor of your home to ensure your safety. They should be located away from the heating appliance and close to the sleeping areas. Follow the smoke detector manufacturer's placement and installation instructions, and be sure to maintain regularly.
2. A conveniently located Class A fire extinguisher to contend with small fires resulting from burning embers.
3. A CO detector should be installed in the room with the appliance.
4. A practiced evacuation plan, consisting of at least two escape routes.
5. A plan to deal with a chimney fire as follows:
   In the event of a chimney fire:
   a. Evacuate the house immediately
   b. Notify fire department.

Notice: Hearth & Home Technologies assumes no responsibility for the improper performance of the appliance system caused by:

- Inadequate draft due to environmental conditions
- Down drafts
- Tight sealing construction of the structure
- Mechanical exhausting devices
- Over drafting caused by excessive chimney heights
- Ideal performance is with height of chimney between 16 feet (4.88m) measured from the base of the appliance.

C. Negative Pressure

WARNING

Asphyxiation Risk

- Negative pressure can cause spillage of combustion fumes, soot and carbon monoxide.
- Appliance needs to draft properly for safety.

Negative pressure results from the imbalance of air available for the appliance to operate properly. It can be strongest in lower levels of the house.

Causes include:

- Exhaust fans (kitchen, bath, etc.)
- Range hoods
- Combustion air requirements for furnaces, water appliances and other combustion appliances
- Clothes dryers
- Location of return-air vents to furnace or air conditioning
- Imbalances of the HVAC air handling system
- Upper level air leaks such as:
  - Recessed lighting
  - Attic hatch
  - Duct leaks

To minimize the effects of negative air pressure:

- Install outside air to the stove with the intake facing prevailing winds during the heating season
- Ensure adequate outdoor air for all combustion appliances and exhaust equipment
- Ensure furnace and air conditioning return vents are not located in the immediate vicinity of the appliance
- Avoid installing the appliance near doors, walkways or small isolated spaces
- Recessed lighting should be a “sealed can” design
- Attic hatches weather stripped or sealed
- Attic mounted duct work and air handler joints and seams taped or sealed
- Basement installations should be avoided

WARNING

Fire Risk.

Hearth & Home Technologies disclaims any responsibility for, and the warranty will be voided by, the following actions:

- Installation and use of any damaged appliance.
- Modification of the appliance.
- Installation other than as instructed by Hearth & Home Technologies.
- Installation and/or use of any component part not approved by Hearth & Home Technologies.
- Operating appliance without fully assembling all components.
- Operating appliance without legs attached (if supplied with appliance).
- Do NOT Over fire - If appliance or chimney connector glows, you are over firing.

Any such action that may cause a fire hazard.

D. Tools And Supplies Needed

Before beginning the installation be sure the following tools and building supplies are available:

- Reciprocating saw
- Pliers
- Hammer
- Phillips screwdriver
- Flat blade screwdriver
- Plumb line
- Level
- Misc. screws and nails
- 1/2-3/4 in. length, #6 or #8 self-drilling screws
- Framing material
- High temp caulking material
- Gloves
- Framing square
- Electric drill and bits
- Safety glasses
- Tape measure

E. Inspect Appliance and Components

- Remove appliance and components from packaging and inspect for damage.
- Report to your dealer any parts damaged in shipment.
- **Read all the instructions before starting the installation. Follow these instructions carefully during the installation to ensure maximum safety and benefit.**

WARNING

Fire Risk

Inspect appliance and components for damage. Damaged parts may impair safe operation.

- Do NOT install damaged components.
- Do NOT install incomplete components.
- Do NOT install substitute components.

Report damaged parts to dealer.

F. Install Checklist

ATTENTION INSTALLER:
Follow this Standard Work Checklist

This standard work checklist is to be used by the installer in conjunction with, not instead of, the instructions contained in this installation manual

Customer: _____

Date Installed: _____

Lot/Address: _____

Location of Appliance: _____

Installer: _____

Dealer/ Distributor Phone #: _____

Serial #: _____

Model : _____

WARNING! Risk of Fire or Explosion! *Failure to install appliance according to these instructions can lead to a fire or explosion.*

Appliance Install	**YES**	**IF NO, WHY?**
Verified clearance to combustibles.		
Appliance is leveled and connector is secured to appliance.		
Hearth extension size/height decided.		
Outside Air Kit Installed.		
Floor protection requirements have been met.		
If appliance is connected to a masonry chimney, it should be cleaned and inspected by a professional. If installed to a factory built metal chimney, the chimney must be installed according to the manufacturer's instructions and clearances.		
Chimney		
Chimney configuration complies with diagrams.		
Chimney installed, looked and secured in place with proper clearance.		
Chimney meets recommended height requirements (16 Feet).		
Roof flashing installed and sealed.		
Terminations installed and sealed.		
Clearances		
Combustible materials not installed on non-combustible areas.		
Verified all clearances meet installation manual requirements.		
Mantels and wall projections comply with installation manual requirements.		
Protective hearth strips and hearth extensions installed per manual requirements.		
Appliance Setup		
All packaging and protective materials removed.		
Firebrick, baffle and ceramic blanket installed correctly		
All labels have been removed from the door.		
All packaging materials are removed from inside/under the appliance.		
Manual bag and all of its contents are removed from inside/under the appliance and given to the party responsible for use and operation.		

Hearth & Home Technologies recommends the following:

- Photographing the installation and copying this checklist for your file.
- That this checklist remain visible at all times on the appliance until the installation is complete.

Comments: Further description of the issues, who is responsible (Installer/Builder/Other Trades, etc.) and corrective action needed:

Comments communicated to party responsible _____ by _____ on _____

(Builder/Gen. Contractor) (Installer) (Date)

3 Dimensions and Clearances

A. Appliance Dimensions

NOTE: Flue Collar size is 6” (152mm) diameter (ID)

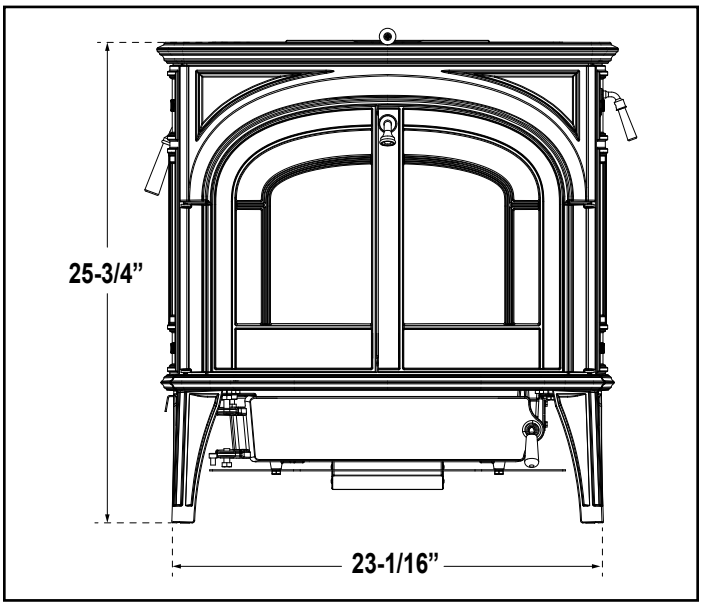

Figure 3.1 - Front View

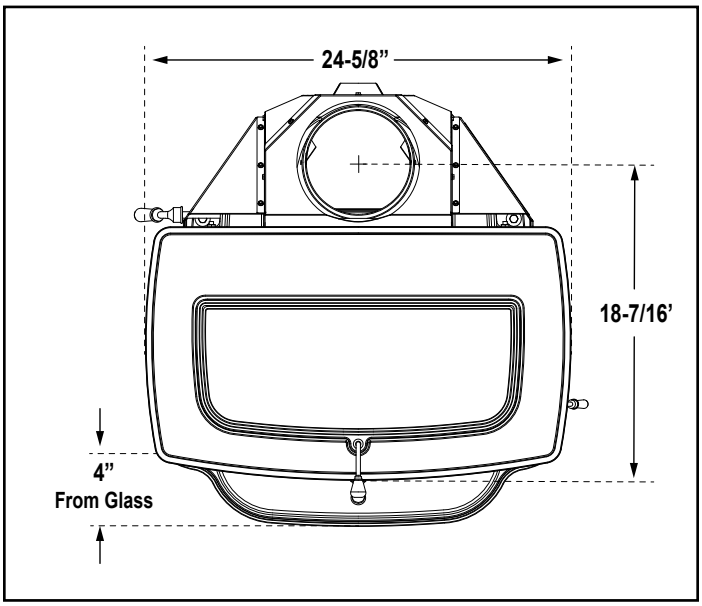

Figure 3.2 - Top View

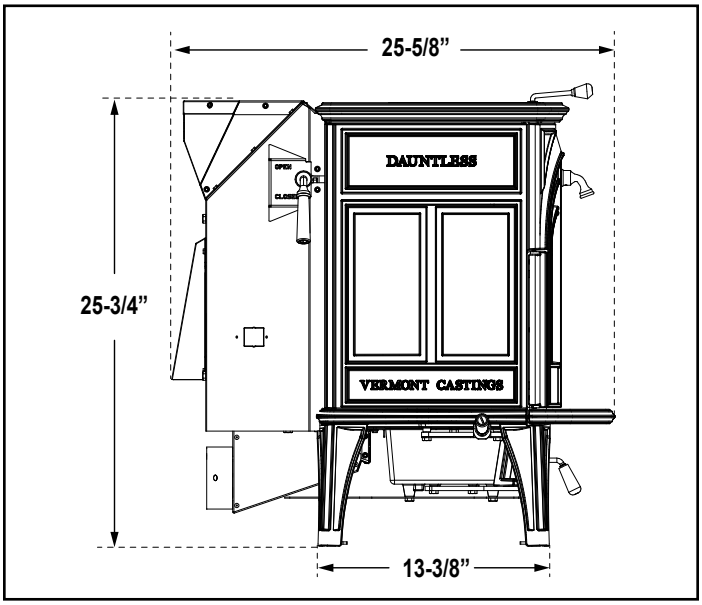

Figure 3.2 - Side View - Top Vent

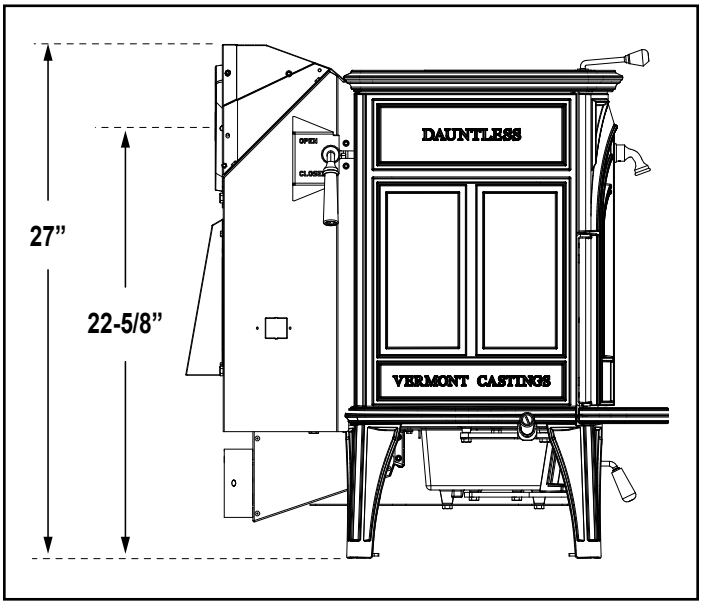

Figure 3.4 - Side View - Rear Vent

B. Hearth Protection Requirements

FLOOR PROTECTION: It is necessary to install a Type I floor protector. (Spark & Ember protection ONLY)

Floor protector must be non-combustible material extending under the appliance to a minimum of 16” (406 mm) in front of glass, and 8” (203 mm) to both sides of the fuel loading door. Open the door and measure 8” (203 mm) from the side edge of the opening in the face of the appliance. *See exception.

In Canada, similar floor protection must be provided 18” (457 mm) in front and 8” (203 mm) from the sides and rear of the appliance, Figure 3.8

***EXCEPTION:** Non-combustible floor protections must extend beneath the flue pipe when installed with horizontal venting and extend 2” (51 mm) beyond each side, Figure 3.7.

WARNING

Fire Risk

Hearth pads must be installed exactly as specified. High temperatures or hot embers may ignite concealed combustibles.

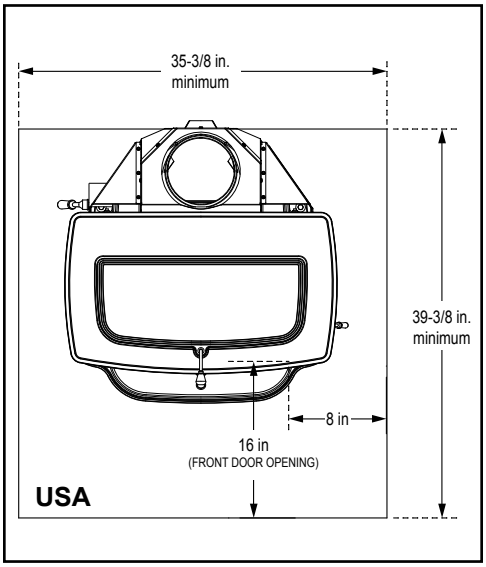

Figure 3.5

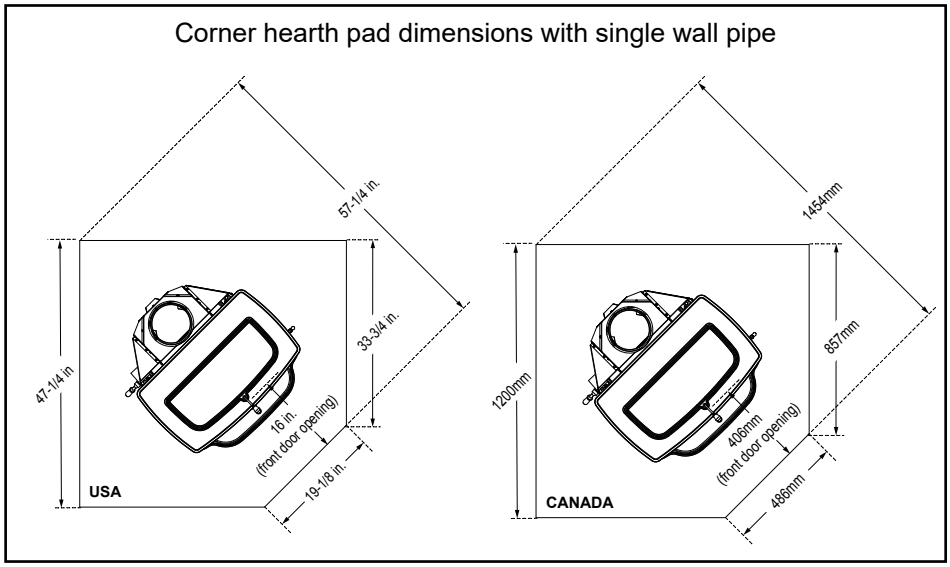

Figure 3.6

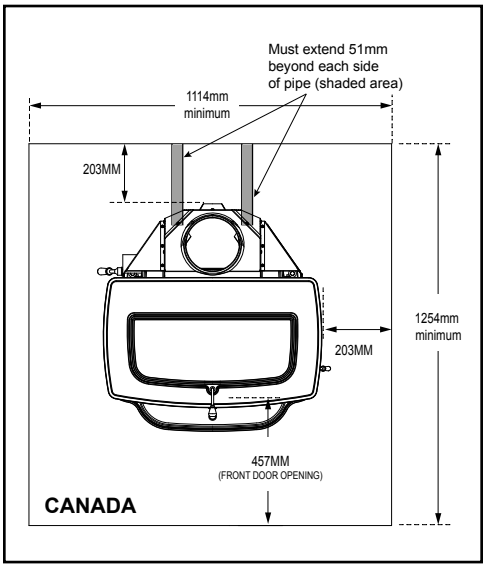

Figure 3.7

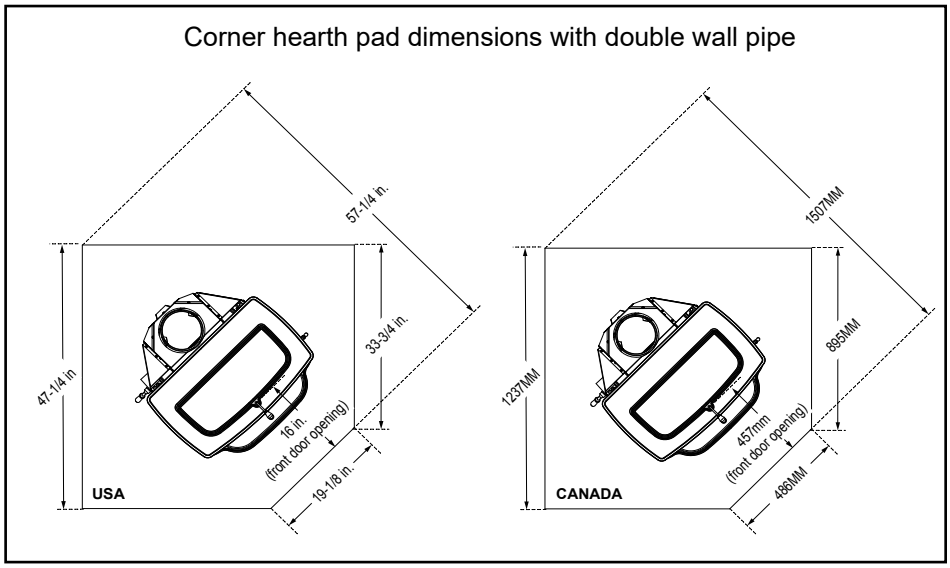

Figure 3.8

C. Clearances to Combustibles

Minimum Clearances to Combustible Materials Note: A, C and F Dimensions are to the center of the flue collar								
Installation: Full Vertical								
	A	**B**	**C**	**D**	**E**	**F**	**G**	**H***
Single Wall Pipe								
Double Wall Pipe								
Installation: 90 Degree Elbow off Top of Appliance through back wall								
Double Wall Pipe								
Installation: Horizontal Through the Wall								
Single Wall Pipe								
For Factory Alcove: 6” diameter listed Double wall air insulated connector pipe with UL103 HT listed factory built Class A Chimney or Masonry chimney. Maximum depth Alcove shall be no more than 48” (1219 mm) and the referenced Alcove clearances. Canada must comply with CAN/ULC-S269 M87 for the 650° factory built chimney. *Follow pipe manufacturers clearances as required.								

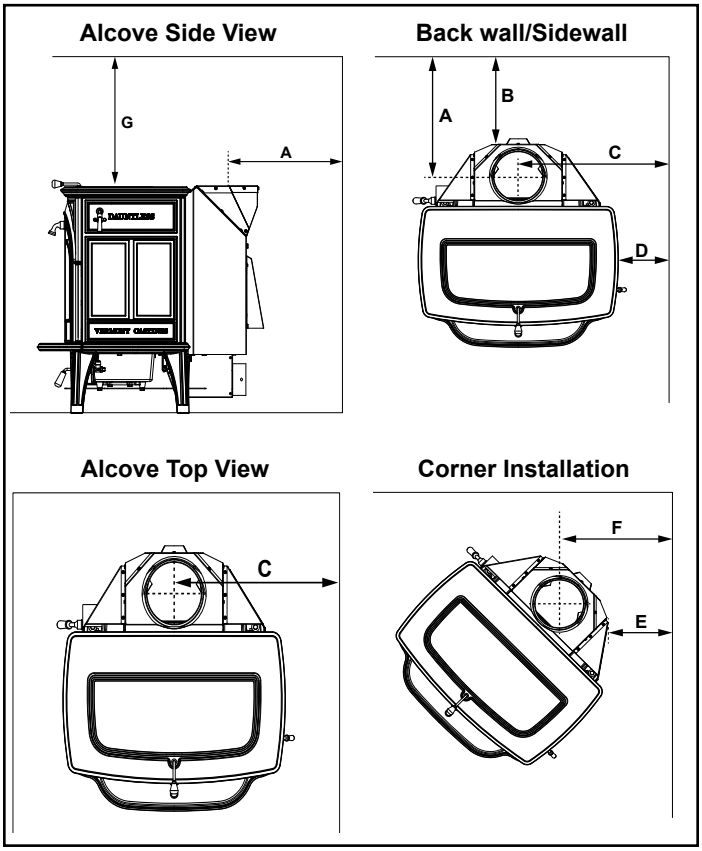

Figure 3.9

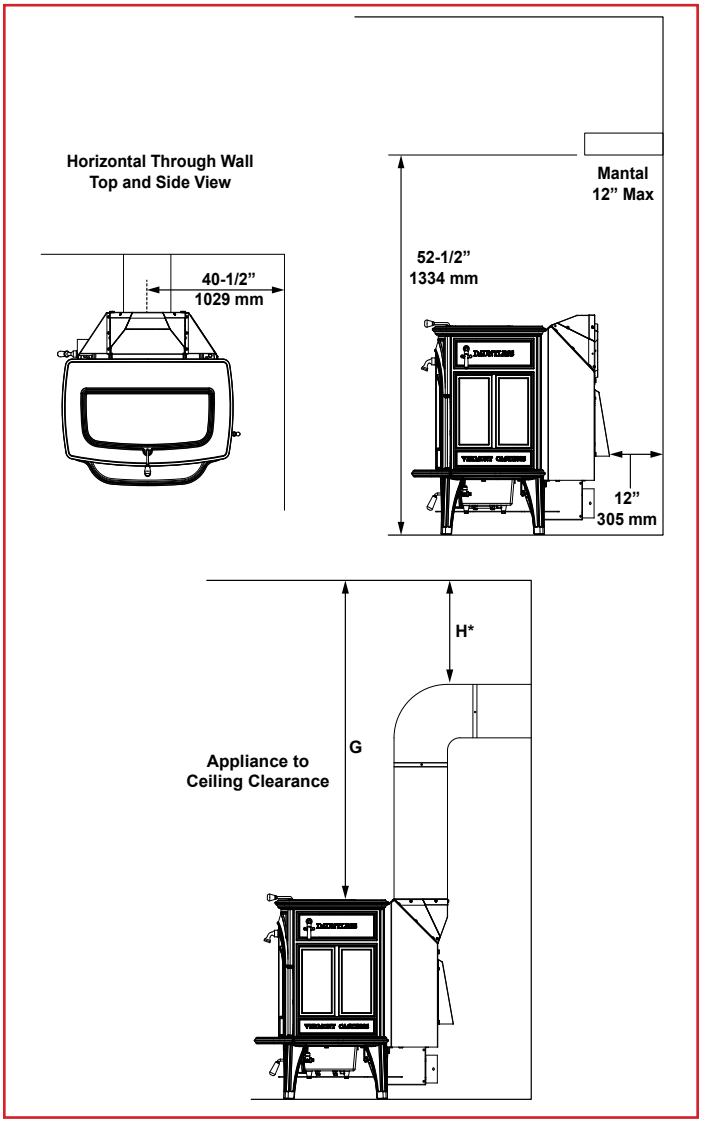

Figure 3.10

WARNING

Fire Risk

- Comply with all minimum clearances to combustibles as specified.
- Failure to comply may cause house fire.

D. Locating Your Appliance & Chimney

Location of the appliance and chimney will affect performance. As shown in Figure 3.11 the chimney should:

- Install through the warm space enclosed by the building envelope. This helps to produce more draft, especially during lighting and die down of the fire.
- Penetrate the highest part of the roof. This minimizes the affects of wind turbulence and down drafts.
- Consider the appliance location in order to avoid floor and ceiling attic joists and rafters.
- Locate termination cap away from trees, adjacent structures, uneven roof lines and other obstructions.

Your local dealer is the expert in your geographic area and can usually make suggestions or discover solutions that will easily correct your flue problem.

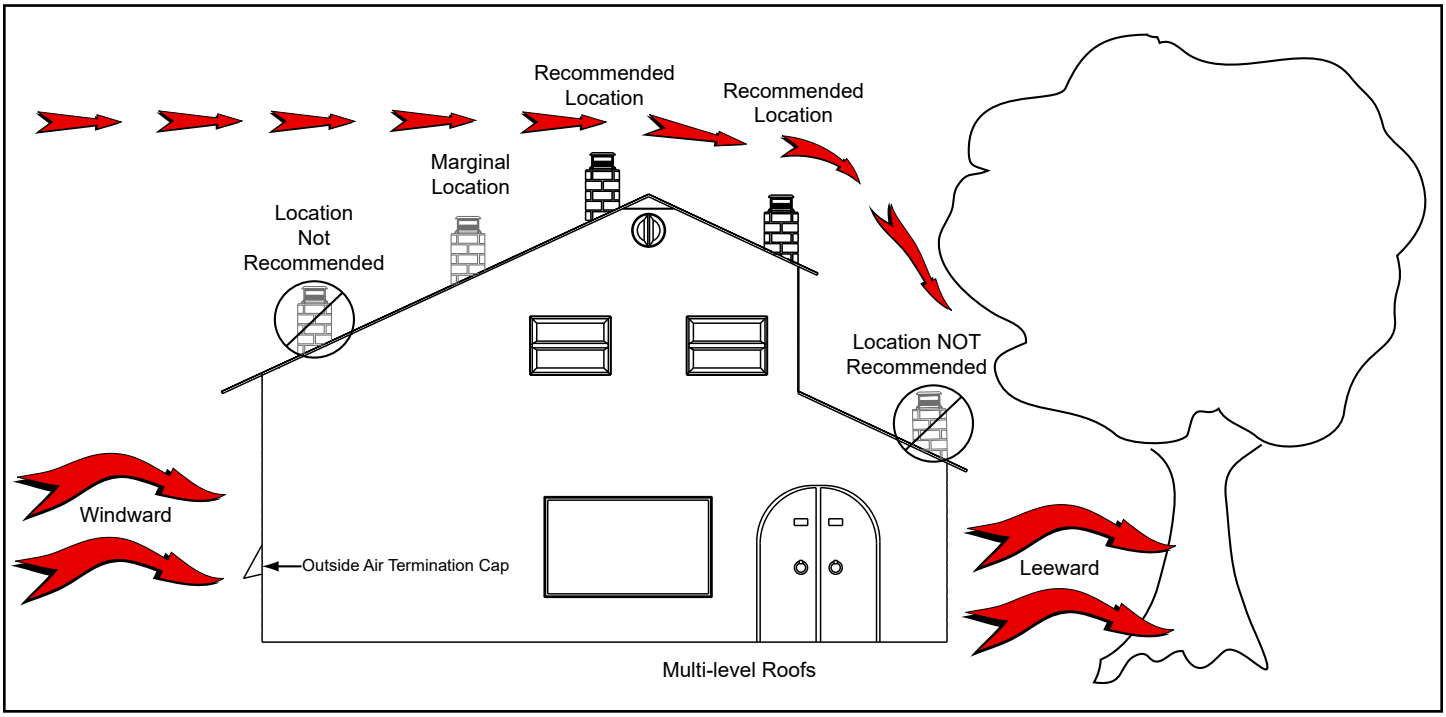

Figure 3.11

E. Chimney Termination Requirements

Follow manufacturer's instructions for clearance, securing flashing and terminating the chimney, Figures 3.12 & 3.13.

- Must have an approved and Listed cap
- Must not be located where it will become plugged by snow or other material
- Must terminate at least 3 feet (91 cm) above the roof <u>and</u> at least 2 feet (61 cm) above any portion of the roof within 10 feet (305 cm).
- Must be located away from trees or other structures

NOTICE:

- Chimney performance may vary.
- Trees, buildings, roof lines and wind conditions affect performance.
- Chimney height may need adjustment if smoking or overdraft occurs.

NOTICE: Locating the appliance in a basement or in a location of considerable air movement can cause intermittent smoke spillage from appliance. Do not locate appliance near

- Frequently open doors
- Central heat outlets or returns

F. Chimney Location (2-10-3 Rule)

These are safety requirements and are not meant to assure proper flue draft.

This appliance is made with a 6” (152 mm) diameter chimney connector as the flue collar on the appliance.

- Changing the diameter of the chimney can affect draft and cause poor performance.
- It is not recommended to use offsets and elbows at altitudes above 4000 feet above sea level and or when there are other factors that affect flue draft.

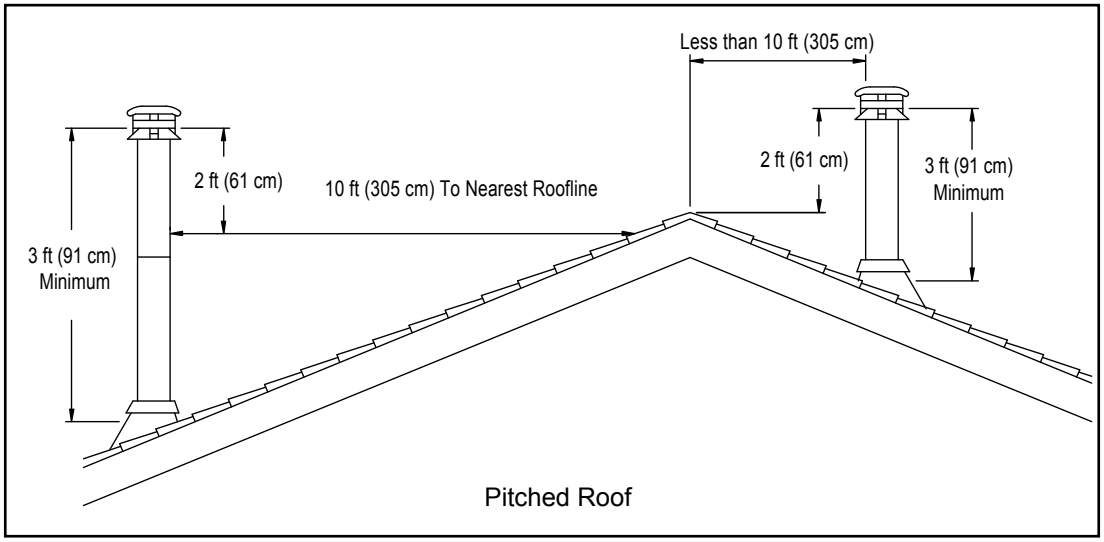

Figure 3.12

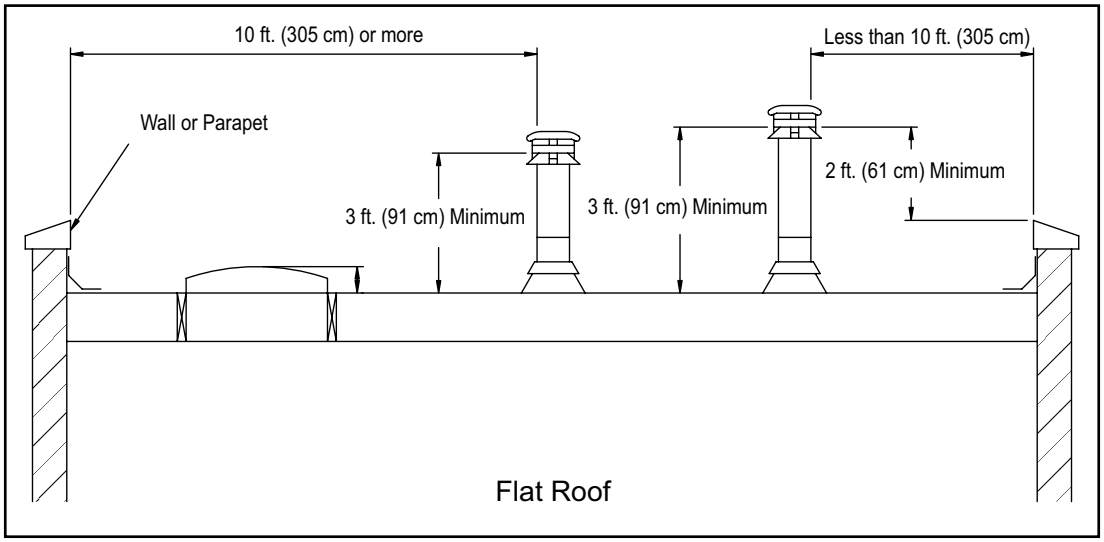

Figure 3.13

4 Chimneys & Venting

A. Venting & Draft Management

A stove is part of a system, which includes the chimney, the operator, the fuel, and the home. The other parts of the system will affect how well the stove works. When there is a good match between all the parts, the system works well.

Wood stove or insert operation depends on natural (unforced) draft. Natural draft occurs when the exhaust is hotter (and therefore lighter) than the outdoor air at the top of the chimney. The bigger the temperature difference, the stronger the draft. As the hot gases rise through the chimney they provide suction or 'draw' that pulls air into the stove for combustion. A slow, lazy fire with the stove's air inlets fully open indicates a weak draft. A brisk fire, supported only by air entering the stove through the normal inlets, indicates a good draft. The stove's air inlets are passive; they regulate how much air can enter the stove, but they don't move air into it.

Depending on the features of your installation - steel or masonry chimney, inside or outside the house, matched to the stove's outlet or oversized - your system may warm up quickly, or it may take a while to warm up and operate well. With an 'airtight' stove, one which restricts the amount of air getting into the firebox, the chimney must keep the stove's exhaust warm all the way to the outdoors in order for the stove to work well. Some chimneys do this better than others. Here's a list of features and their effects.

Masonry Chimney

Masonry is a traditional material for chimneys, but it can perform poorly when it serves an 'airtight' stove. Masonry is a very effective 'heat sink' - it absorbs a lot of heat. It can cool the chimney gases enough to diminish draft. The bigger the chimney, the longer it takes to warm up. It's often very difficult to warm up an outdoor masonry chimney, especially an oversized one, and keep it warm enough to maintain an adequate draft.

Steel Chimney

Most factory-made steel chimneys have a layer of insulation around the inner flue. This insulation keeps the chimney warm. The insulation is less dense than masonry, so a steel chimney warms up more quickly than a masonry chimney. Steel doesn't have the good looks of masonry, but it performs much better.

Indoor/Outdoor Location

Because the chimney must keep the smoke warm, it's best to locate it inside the house. This uses the house as insulation for the flue and allows some heat release into the home. An indoor chimney won't lose its heat to the outdoors, so it takes less heat from the stove to heat it up and keep it warm.

Single Venting

Each 'airtight' stove requires its own flue. If an airtight stove is vented to a flue that also serves an open fireplace, or a leakier stove, it's easier for the chimney draft to pull air in through those channels and performance of the stove suffers. Imagine a vacuum cleaner with a hole in the hose to understand the effect here. In some cases the other appliance can even cause a negative draft through the stove, and result in a dangerous draft reversal.

Chimney Height

The common wisdom tells us that a taller flue draws better than a short one. A rule of thumb for minimum height states that the total system height (from the floor the appliance is mounted on to the top of the chimney) should never be less than 4.6 m (15 ft.). Most normal installations exceed this height, but installations in cottages with shallow-pitch roofs may not. Don't make a chimney taller unless you must in order to meet the safety rules, or unless there's some nearby feature causing a downdraft. Even then, there are downdraft-preventing chimney caps available, which are probably the smarter choice.

Flue Sizing

The inside size of a chimney for an 'airtight' stove should match the size of the stove's flue outlet. When a chimney serves an airtight stove, more is not better; in fact, it can be a disadvantage. Hot gases lose heat faster as they travel slower through a chimney; if we vent a stove with a six-inch flue collar (28 square inch area) into a 10 x 10" flue, the gases slow to one third their original speed. This allows the gases to cool more rapids, which weakens draft strength. If an oversized flue is also outside the house, the heat it absorbs gets transferred to the outdoor air and the flue usually stays cool.

It is common for a masonry flue, especially one serving a fireplace, to be oversized for the stove. It can take quite a while to warm up such a flue, and the results can be disappointing. The best solution to an oversized flue is an insulated steel chimney liner, the same diameter as the stove or inserts flue outlet; the liner keeps the exhaust warm, and the result is a stronger draft. An non-insulated liner is a second choice - the liner keeps the exhaust restricted to its original size, but the hot gases still must warm up the air around the liner. This makes the warm-up process take longer.

Pipe & Chimney Layout

Every turn the exhaust must take as it travels to the chimney top will slow it down. The ideal pipe and chimney layout is to vent vertically into a completely straight and vertical chimney. If you are starting from scratch, use this layout if possible. If the stovepipe must elbow to enter a chimney, locate the thimble about midway between the stove top and the ceiling. This achieves several goals: it allows the gases to speed up before they must turn, it leaves some pipe in the room for heat transfer, and it gives you long-term flexibility for installing a different stove without relocating the thimble.

There should be no more than eight feet of single-wall stove pipe between the stove and a chimney; longer runs can cool the exhaust enough to cause draft and creosote problems. With prefabricated chimney, bring it down to six to eight feet from the stove. With a masonry chimney, arrange the pipe so that it turns into the chimney within eight feet of the stove.

B. Venting Components

Chimney Connector: It is also known as flue pipe or appliance pipe. The chimney connector joins the appliance to the chimney. It must be a 6” (152 mm) minimum diameter 24 gauge mild steel black or 26 gauge blued steel, or an approved air-insulated double wall venting pipe.

Thimble: A manufactured or site-constructed device installed in combustible walls through which the chimney connector passes to the chimney. It is intended to keep the walls from igniting. Site constructed thimbles must meet NFPA 211 Standards. Prefabricated must be suitable for use with selected chimney and meet UL103 Type HT Standards. Follow instructions provided by the manufacturer for manufactured thimbles for masonry chimney and prefabricated chimneys.

Chimney: The chimney can be new or existing, masonry or prefabricated and must meet the following minimum requirements specified in Section 4B.

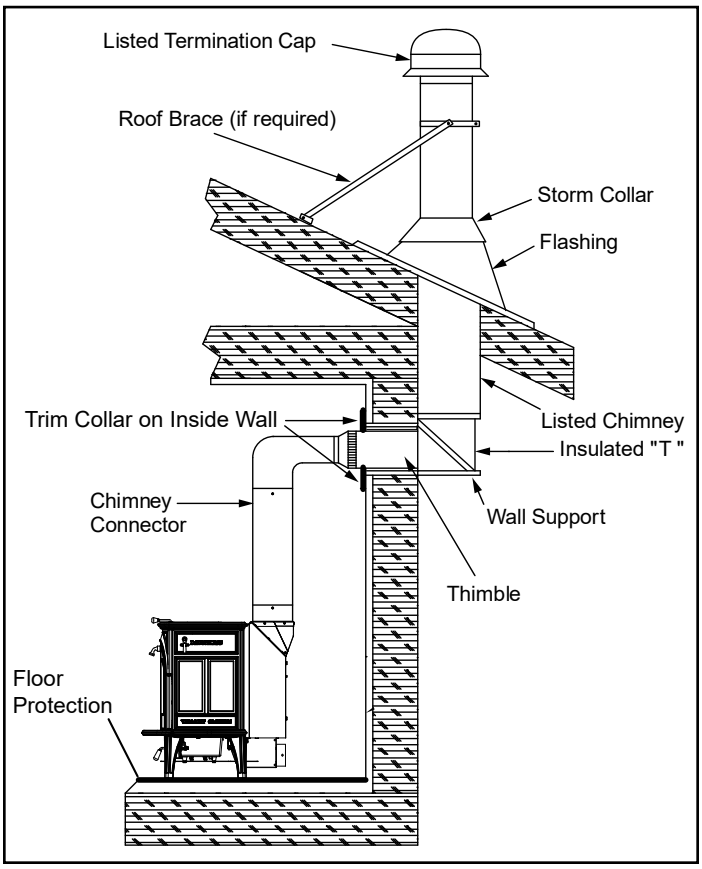

Figure 4.1 - Prefabricated Exterior Chimney

C. Chimney Systems

Prefabricated Metal Chimney

- Must be minimum 6” (152 mm) diameter (ID) high temperature chimney listed to UL 103 HT (2100 °F) or ULC S629M.
- Must use components required by the manufacturer for installation.
- Must maintain clearances required by the manufacturer for installation.
- Refer to manufacturers instructions for installation.

NOTE: In Canada when using a factory-built chimney it must be safety listed, **Type UL103 HT (2100 °F) CLASS “A”** or conforming to **CAN/ULC-S629M, STANDARD FOR 650 °C FACTORY-BUILT CHIMNEYS.**

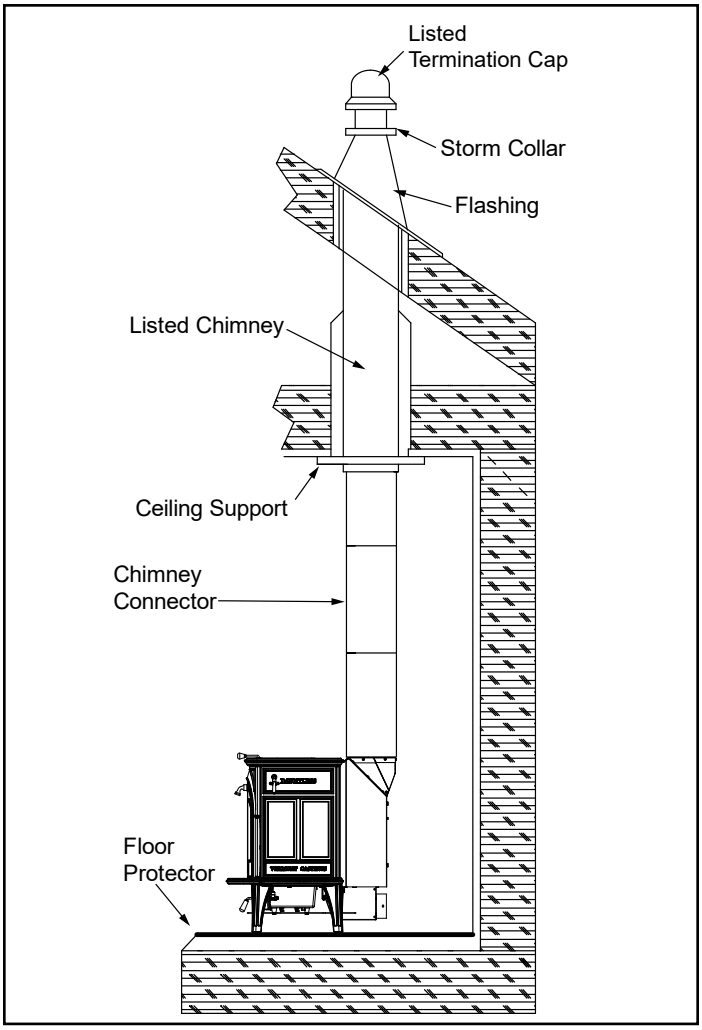

Figure 4.2 - Prefabricated Interior Chimney

Thimble

Site constructed for masonry chimney installation:

Components

- A minimum length of 12” (305 mm) (longer for thicker walls) of solid insulated factory-built chimney length constructed to UL 103 Type HT 6” (152 mm) inside diameter. Chimney needs to extend a minimum of 2” (51 mm) from the interior wall and a minimum of 1” (25 mm) from the exterior wall.
- Wall spacer, trim collar and wall band to fit solid pack chimney selected.
- Minimum 8” (203 mm) diameter clay liner section (if not already present in chimney) and refractory mortar.
- When jurisdiction requires install approved chimney liner in masonry chimney.

Air Clearances

- Masonry chimney clearance must meet NFPA 211 minimum requirement of 2” (51 mm) to sheet metal supports and combustibles.
- Minimum of 1” (25 mm) clearance around the chimney connector.
- Top of wall opening is a minimum of 13-1/2” (343 mm) from ceiling or 4-1/2” (114 mm) below minimum clearance specified by chimney connector manufacturer. NFPA 211 minimum vertical clearance of 18” (457mm) from chimney connector and ceiling or minimum recommended by chimney connector manufacturer, Figure 4.3

Instructions

1. Open inside wall at proper height for the chimney connector to enter the masonry chimney, Figure 4.3
2. Entry hole to masonry chimney must be lined with an 8” (203 mm) minimum diameter clay liner, or equivalent, secured with refractory mortar.
3. Construct a 17” x 17” (432 mm x 432 mm) outside dimension frame from 2 x 2 framing lumber to fit into wall opening. Inside opening of frame should be no less than 14” x 14” (356 mm x 356 mm), Figure 4.4.
   Attach the wall spacer to the chimney side of the frame.
5. Nail the frame into the wall opening. The spacer should be on the chimney side.
6. Insert the section of the solid insulated chimney into the outer wall of the masonry chimney.
7. Tightly secure the length of the solid insulated chimney with the wall band to the masonry chimney.
8. Insert a section of chimney connector into the chimney. Make sure it does not protrude past the edge of the clay chimney liner inside the chimney.
9. Seal the end of the chimney connector to the clay liner with refractory mortar.
10. Install trim collar around the sold pack chimney section.

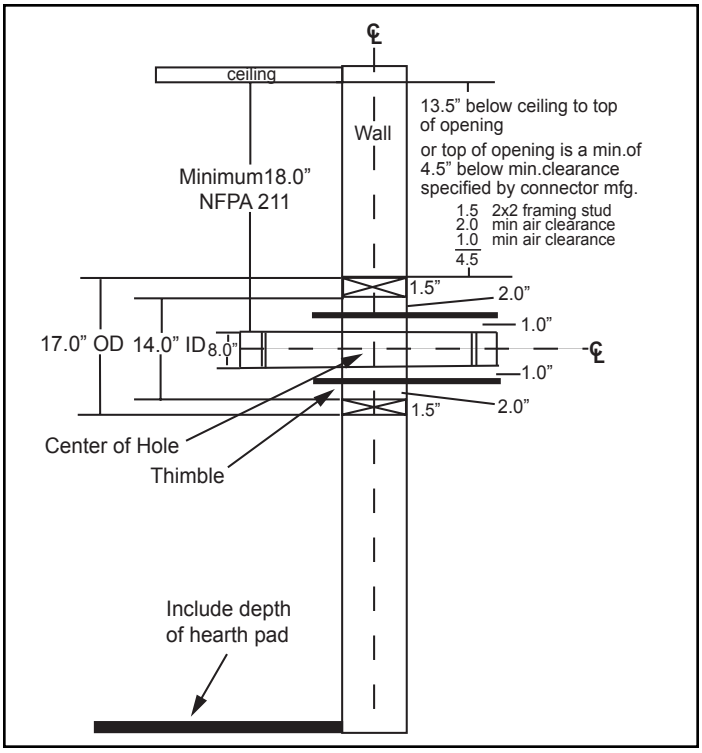

Figure 4.3

Solid Pack Chimney with Metal Supports as a Thimble

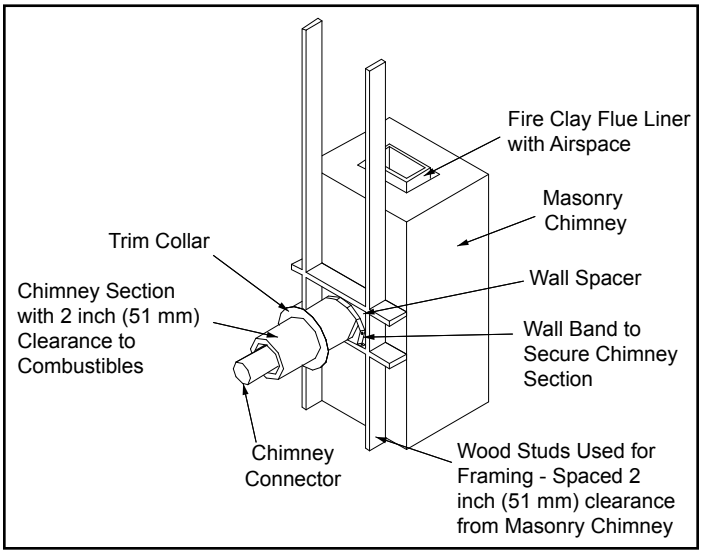

Figure 4.4

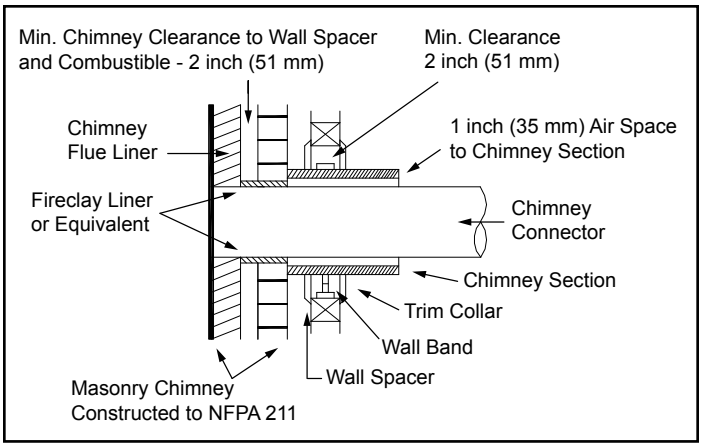

Figure 4.5

WARNING

Fire Risk
Do NOT pack insulation or other combustibles between spacers.

- ALWAYS maintain specified clearances around venting and spacers.
- Install spacers as specified.

Failure to keep insulation or other material away from vent pipe may cause fire.

WARNING

Fire Risk
Inspection of Chimney:
- Chimney must be in good condition.
- Meets minimum standard of NFPA 211
- Factory-built chimney must be 6” (152mm) UL103 HT.

WARNING

Asphyxiation Risk
- DO NOT CONNECT THIS Appliance TO A CHIMNEY FLUE SERVICING ANOTHER APPLIANCE.
- DO NOT CONNECT TO ANY AIR DISTRIBUTION DUCT OR SYSTEM.

May allow flue gases to enter the house.

WARNING

Improper installation, adjustment, alteration, service or maintenance can cause injury or property damage. Refer to the owner’s information manual provided with this appliance. For assistance or additional information consult a qualified installer, service agency or your dealer.

D. Installing Chimney Components

Chimney Connector

Single wall connector or appliance pipe

This must be at least 24 gauge mild steel or 26 gauge blue steel. The sections must be attached to the appliance and to each other with the crimped (male) end pointing toward the appliance. All joints, including the connection at the flue collar, should be secured with 3 sheet metal screws. Make sure to follow the minimum clearances to combustibles. Where passage through the wall, or partition of combustible construction is desired in Canada, the installation shall conform to CAN/CSA-B365.

Factory-built (Double-Wall) listed chimney connector

A listed connector (vented) must be used when installing this appliance in a mobile home. The listed connectors must conform to each other to ensure a proper fit and seal.

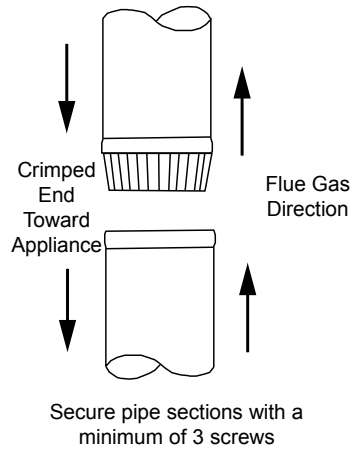

Figure 4.6 - Chimney Connector (Appliance Pipe)

WARNING

Fire Risk
Follow Chimney Connector Manufacturer’s Instructions for Proper Installation.
ONLY use connector:

- Within the room, between appliance and ceiling or wall.

Connector shall NOT pass through:
- Attic or roof space
- Closet or similar concealed space
- Floor or ceiling

Maintain minimum clearances to combustibles

5 Appliance Set-Up

A. Removing Unit from Skid

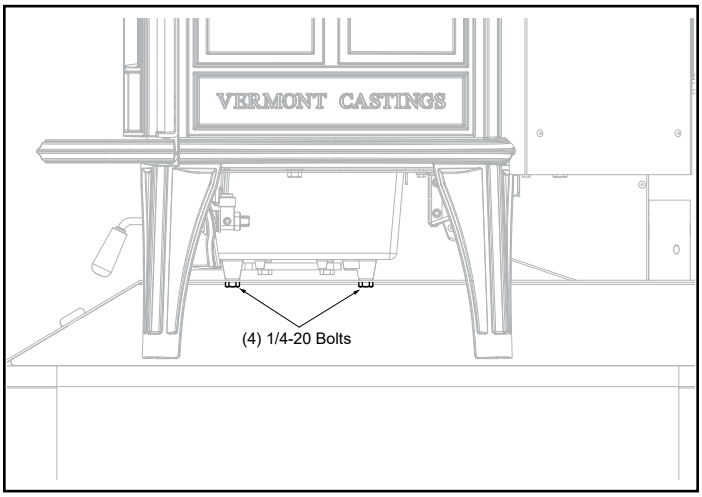

Figure 5.1 - Remove unit from shipping brackets.

Remove the unit from the shipping brackets by removing (2) 1/4-20 hex head bolts from each shipping bracket, leaving brackets attached to the skid, Figure 5.1. (Save the 1/4-20 hex head bolts as they will be needed later to install heat shield.)

NOTE: When moving the stove, lift the stove to take weight off the legs whenever possible. Dragging or sliding the stove, especially across rough surfaces can cause the legs to break.

B. Assembly

Set Up Your Stove

Cast iron stoves are heavy, and it will take two to four people to move your Dauntless FlexBurn into position.

Wipe the protective coating of oil from the griddle with a clean dry rag or a paper towel.

Install the handle on the griddle. Open front door and push up on griddle and assemble the handle, Figure 5.2.

With the handle pointing 45° from its final position, tighten the nut as far as possible with the pliers. Move the handle to its final position while still holding the nut with the pliers.

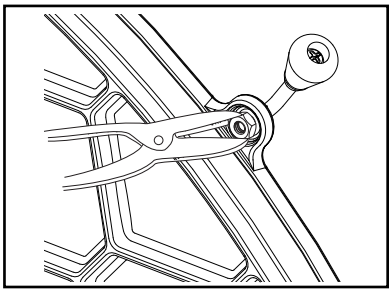

Figure 5.2 - Attach the griddle handle.

CAUTION

Overtightening can strip tapped threads.

Install the Bottom Heat Shield

NOTE: The Bottom Heat Shield is required in most installations. Refer to Floor Protection, in the Dimensions and Clearances Section of this manual for further details.

1. Align the bottom heat shield holes with the four bolts removed from the shipping brackets
2. Pass all four bolts through the large end of the keyholes and then pulling the shield forward to engage the smaller ends of the keyhole slots, Figure 5.3.
3. Attach the heat shield sides by passing the slots over the bolt heads. Tighten the hex head bolts.

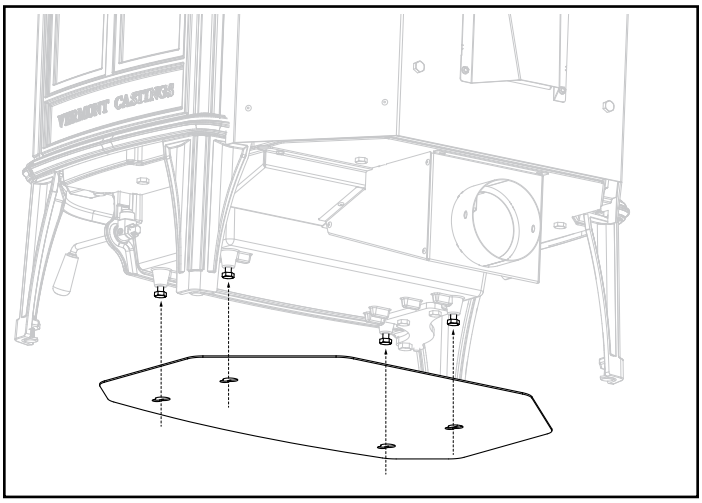

Figure 5.3 - Attach the bottom heat shield.

Adjust the Leg Levelers

Lift the stove slightly so there is no weight on the leg while making the adjustment.

WARNING

The flue collar heat shield must be installed in all installations.

Attach the Damper Handle

Use the 1/4"-20 x 3" screw to attach the damper handle to the damper stub on the left side.

Assemble the Removable Insert Handle

The wooden removable insert handle opens and closes the front doors. Remove after each use, and store it in the handle holder behind the left front leg. Assemble the handle by passing the 3-3/8” screw through the wooden shaft and into the bright metal nub, Figure 5.4. Tighten carefully until snug.

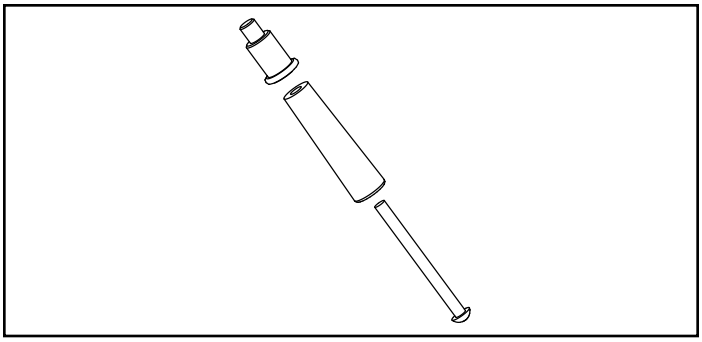

Figure 5.4 - Assemble the fall away door handle.

Storing the Handle

Use the removable handle to open or close the doors. After using it, remove the handle so it will not get hot. Store the handle in the handle holder installed behind the left front leg, Figure 5.5.

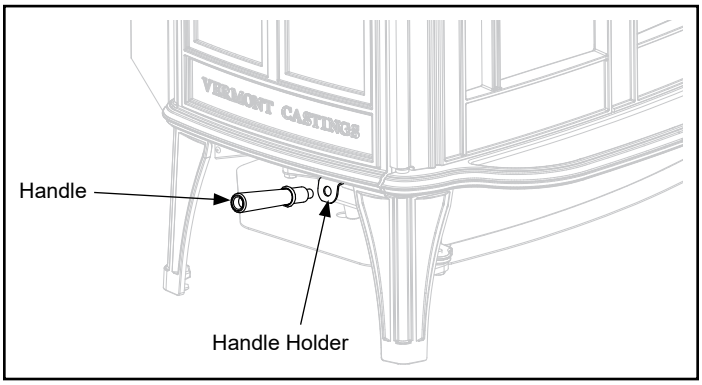

Figure 5.5 - Handle holder and heat shield positions.

C. Installing Optional Catalyst

1. Locate the access cover positioned at the rear center of the unit, Figure 5.6.
2. Remove the access cover by pulling straight up and out, Figure 5.7.
3. Install the catalyst by gently placing it into the cavity and straight down, Figure 5.8. Place the catalyst where the catalyst's ceramic components will not be damaged.

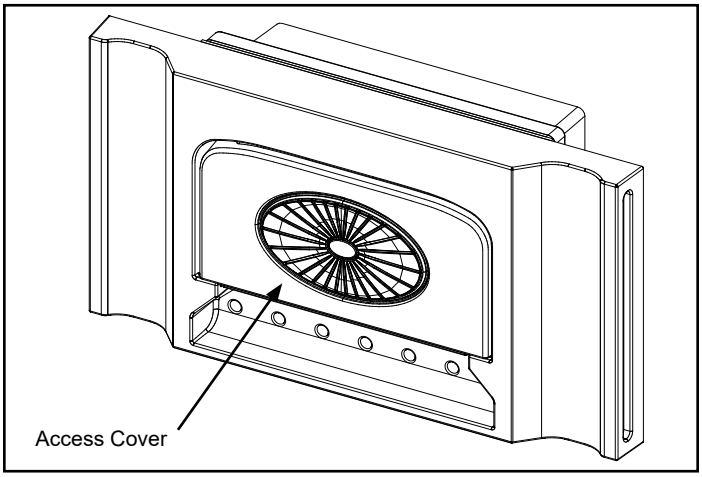

Figure 5.6 - Locate access cover.

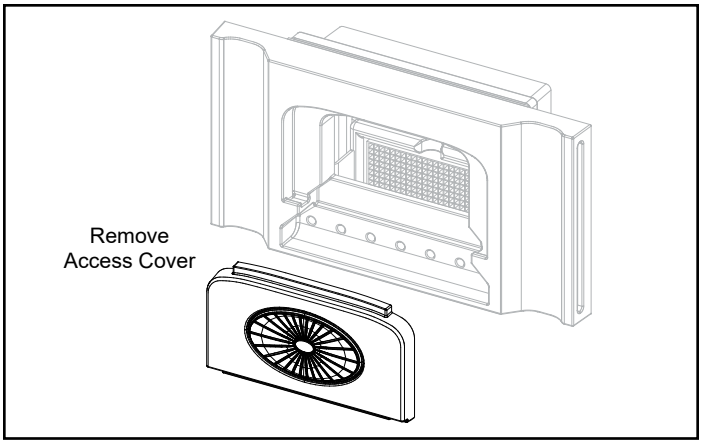

Figure 5.7 - Remove access cover.

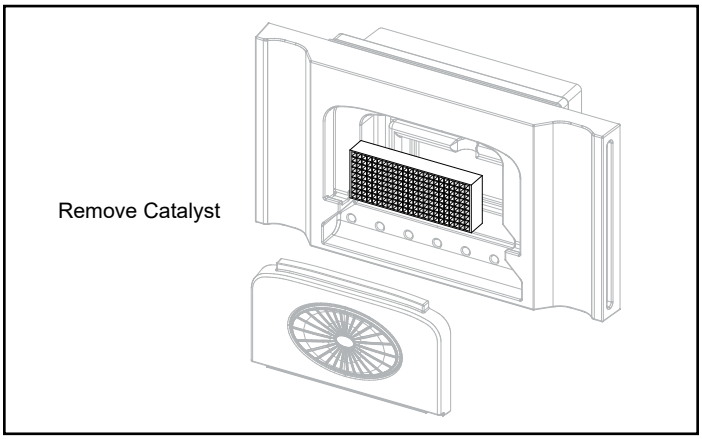

Figure 5.8 - Remove catalyst.

Attach the Catalyst Temperature Probe

If the catalytic performance pack has been purchased, install the catalyst temperature probe, remove the knockout located at the back left hand side of the unit, Figure 5.9. Once knockout is removed, drill a hole using the 3/16" Drill bit supplied in the dimple located just behind the air jacket. Install thermostat duct, bracket and temperature probe using (2) #8 Tek screws also supplied in the kit. Lastly, make sure to fold the bracket strap over catalyst probe and secure with remaining screw.

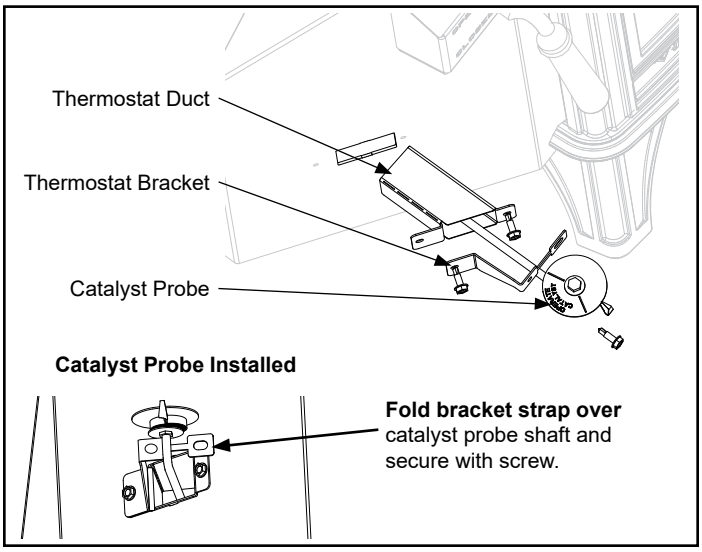

Figure 5.9 - Install the Catalyst Temperature Probe

D. Smoke and CO Detectors & Safety Tips

Smoke and CO Detectors

The use of smoke and carbon monoxide (CO) detectors throughout the home is strongly advised, even if not required by building codes or insurance regulations. It is a good idea to install a smoke detector in the living areas and each bedroom. Follow the smoke/CO detector manufactures placement and installation instructions and maintain regularly.

You may not, however, wish to install a detector in the immediate vicinity of the stove. Depending on the sensitivity of the unit, the alarm can be set off while you are tending the fire or emptying the ashes. If you install a detector in the same room, locate it as far away from the stove as possible.

Safety Tips

Conveniently locate a “Class A” fire extinguisher to contend with small fires. Be sure the fire extinguisher works and is clearly visible. All occupants of the house should know where it is, and how it operates. Have heavy stove gloves available near the stove. Have special safety accessories (e.g., Child Guard Screen) available for use if small children will be in the home.

In the event of a stove pipe or chimney fire….

- Evacuate the house immediately
- Notify the fire department
- If the fire isn’t too threatening, closing down the stove tight, (damper, primary air, all doors) will help to smother the fire.
- Inspect your stove, vent pipe and chimney for any damage caused by the fire and correct any damage before using your stove again.

⚠ WARNING

Fire Risk

- Do not leave the fire unattended when the door is unlatched or when using the fire screen.
- Unstable firewood could fall out of the firebox creating a fire hazard to your home.

F. Reverse the Flue Collar (If necessary)

Tools Required: Phillips head screwdriver.

The flue collar is reversible for either a top or rear venting installation. The appliance is shipped with the flue collar in the top vent position.

Converting Collar For Rear Vent Installation

1. Remove (10) #8 Tek screws from the heat shield cover and heat shield. Remove heat shield and cover, Figure 5.10.
2. Remove (2) 1/4-20 pan head screws from the flue collar. Remove flue collar, Figure 5.10.
3. Turn flue collar to horizontal position. Inspect rope gasket located on the rear cast housing to ensure a leak free seal. Re-install flue collar, heat shield and heat shield cover, Figure 5.11.

Note: There is a knockout on the rear air jacket that will need to be removed prior to installing the flue collar for it to fit properly to the unit, Figure 5.11.

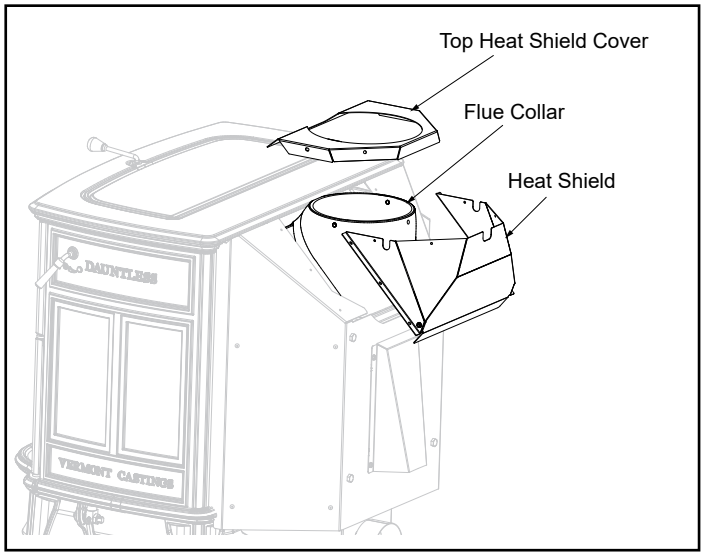

Figure 5.10

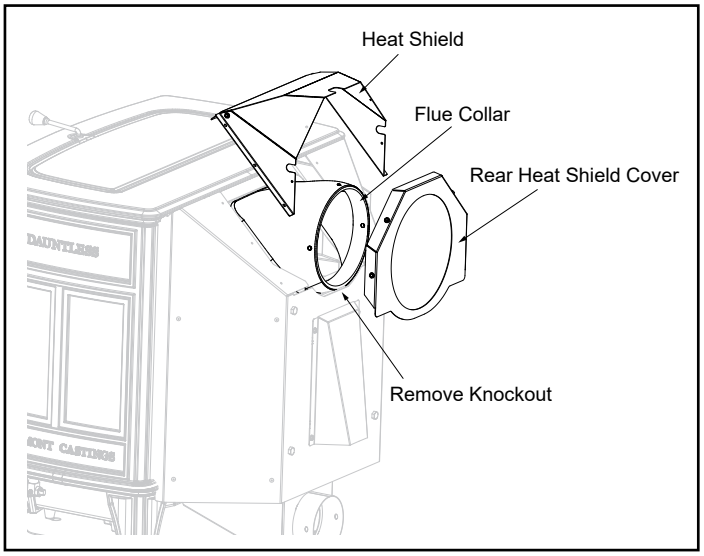

Figure 5.11

G. Outside Air Kit Installation

A source of air (oxygen) is necessary in order for combustion to take place. Whatever combustion air is consumed by the fire must be replaced. Air is replaced via air leakage around windows and under doors. In homes that have tightly sealed doors and windows, an outside air source is needed. An optional Outside Air Kit is available.

Items Needed for Installation (not supplied)

- Phillips head screw driver
- Outside air shield
- Wire ties
- Plastic outside air vent
- Flex / Rigid pipe
- Silicone sealant
- Drills and saws necessary for cutting holes through the wall or flooring in your home.

1. Remove all materials from packing box.
2. Using a #2 Phillips screw driver attach the flex adapter to the appliance using 4 screws. Figure 5.12 & 5.13.
3. Floor & Rear Installation: Cut a 3” (76 mm) hole in outside wall or floor to accommodate outside air piping. Use 3” (76 mm) aluminum metal flex or rigid piping to directly connect outside air to appliance intake. Use the supplied termination cap with a rodent screen. Seal between the wall (or floor) and the pipe with silicone to prevent moisture penetration.

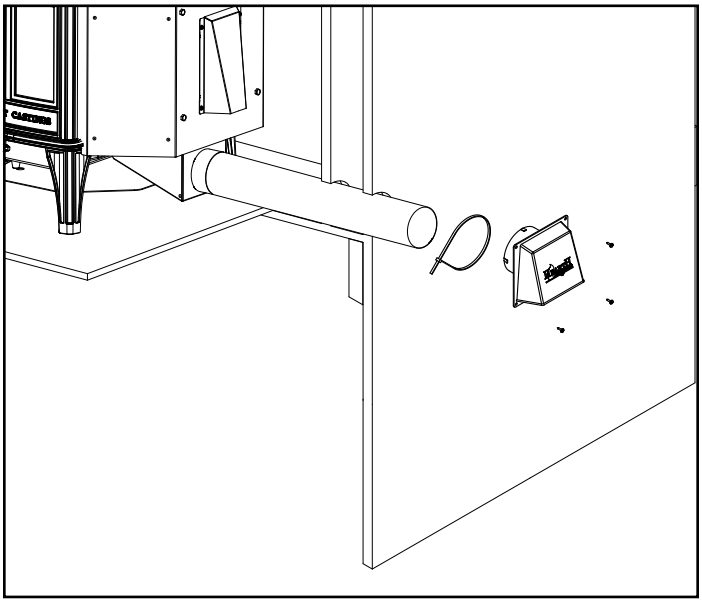

Figure 5.12 - Rear Installation

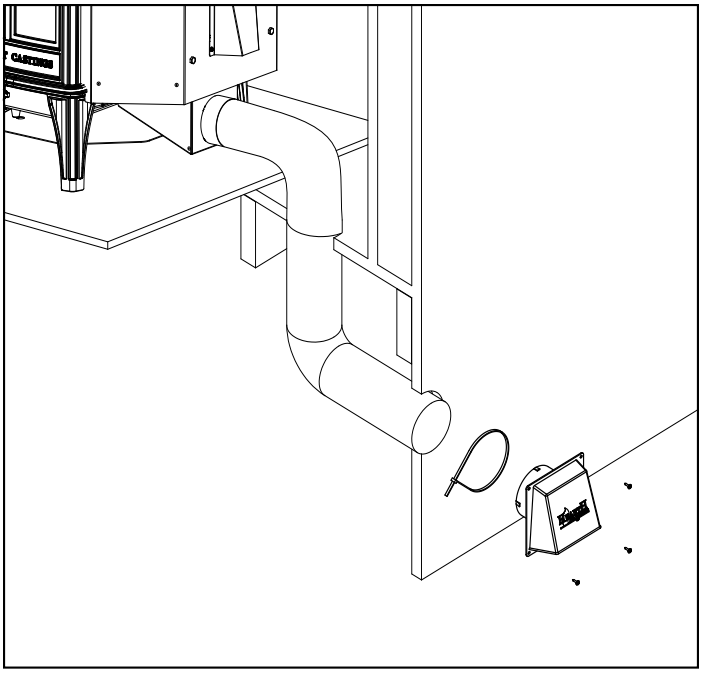

Figure 5.13 - Floor Installation

WARNING

Fire Risk
Asphyxiation Risk
Do not draw outside combustion air from:

- Wall, floor or ceiling cavity
- Enclosed space such as an attic or garage
- Close proximity to exhaust vents or chimneys

Fumes or odor may result

WARNING

Asphyxiation Risk
Outside air inlet must be located to prevent blockage from:

- Leaves
- Snow or ice
- Other debris

Blockage may cause combustion air starvation
Smoke spillage may set off alarms or irritate sensitive individuals.

WARNING

Asphyxiation Risk
Length of outside air supply duct shall NOT exceed the length of the vertical height of the exhaust flue.

- Fire will not burn properly
- Smoke spillage occurs when door is opened due to air starvation

6 Mobile Home Installation - Approved for USA Installation ONLY!

You must use a Vermont Castings Mobile Home Bracket Kit Part #2-00-586189 for installation in a mobile home.

1. An outside air inlet must be provided for combustion.
2. The stove must be permanently secured to the floor using the mobile home brackets supplied in the manual pack along with screws or lag bolts (not supplied), Figure 6.1.

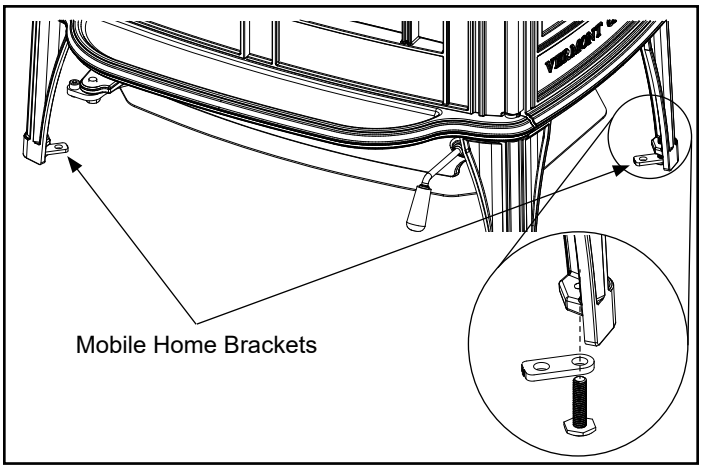

Figure 6.1

3. Appliance must be grounded with #8 solid copper grounding wire or equivalent and terminated at each end with N.E.C. approved grounding device.
4. Appliance must be installed with an approved UL103 HT ventilated chimney connector, UL103 HT chimney, and terminal cap with spark arrestor. Never use a single wall connector (appliance pipe) in a mobile home installation. Use only double-wall connector pipe, Dura-Vent DVL, Selkirk Metalbestos DS or Security DL double-wall connector or any listed double-wall connector pipe.
5. In Canada, this appliance must be connected to a 6" (152 mm) factory-built chimney conforming to CAN/ULC-629M, STANDARD FOR FACTORY BUILT CHIMNEYS.
6. Follow the chimney and chimney connector manufacturer's instructions when installing the flue system for use in a mobile home.
7. Maintain clearance to combustibles.
8. Floor protection requirements must be followed precisely.
9. Use silicone to create an effective vapor barrier at the location where the chimney or other component penetrates to the exterior of the structure.

NOTE: Offsets from the vertical, not exceeding 45°, are allowed per Section 905(a) of the Uniform Mechanical Code (UMC). Offsets greater than 45° are considered horizontal and are also allowed, providing the horizontal run does not exceed 75% of the vertical height of the vent. Construction, clearance and termination must be in compliance with the UMC Table 9C. This installation must also comply with NFPA 211.

NOTE: Top sections of chimney must be removable to allow maximum clearance of 13.5 feet (411cm) from ground level for transportation purposes.

10. Burn wood only. Other types of fuels may generate poisonous gases (e.g., carbon monoxide).
11. If appliance burns poorly while an exhaust blower is on in home, (i.e., range hood), increase combustion air.
12. Installation shall be in accordance with the Manufacturers Home & Safety Standard (HUD) CFR 3280, Part 24.

⚠ CAUTION

THE STRUCTURAL INTEGRITY OF THE MOBILE HOME FLOOR, WALL AND CEILING/ROOF MUST BE MAINTAINED

Do NOT cut through:

- Floor joist, wall, studs or ceiling trusses.
- Any supporting material that would affect the structural integrity.

⚠ WARNING

Asphyxiation Risk

NEVER INSTALL IN A SLEEPING ROOM.

Consumes oxygen in the room.

VERMONT CASTINGS

CONTACT INFORMATION

Hearth & Home Technologies
352 Mountain House Road
Halifax, PA 17032

Please contact your Vermont Castings dealer with any questions or concerns.

For the number of your nearest Vermont Castings dealer

log onto www.vermontcastings.com

CAUTION

DO NOT DISCARD THIS MANUAL

- Important operating and maintenance instructions included.
- Read, understand and follow these instructions for safe installation and operation.
- Leave this manual with party responsible for use and operation.

DO NOT DISCARD

We recommend that you record the following pertinent information for your heating appliance.

Date purchased/installed: _____

Serial Number: _____ Location on appliance: _____

Dealership purchased from: _____ Dealer phone: _____

Notes: _____

_____

_____

_____

This product may be covered by one or more of the following patents: (United States) 5341794, 5263471, 6688302, 7216645, 7047962 or other U.S. and foreign patents pending.

HEARTH & HOME technologies®

Section 3

Test Data by Run

Conditioning Data

Stove Name: DauntCatCord Test Date: 9/13/2019 Run #: 1 File: DauntCatCord19 Record # Start 5 Stop 150

Test Time	145	min
Wet Wood	8.3	kg
Moisture	21	dry %
Dry Wood	6.86	kg
Coal Bed	1.27	kg
Stove DeltaT	353	deg F
Tunnel CD	0.933	

Avg Stack Gasses (amb Corrected)

CO	0.566	%
CO2	13.01	%
O2	7.51	%
HC	n/m	% as CH4
TCC	1.13	% as CO2

Results

Real Time Data*

Rec #	Tst .ET	Top Tmp F	Rht Avg F	Lft Tmp F	Bak Tmp F	Bot Tmp F	Avg Stove F	Ext1 F	Ext2 F	Ext3 F	Ext4 F	Stk Tmp F	Stk Drft "H2O	Scale kg	10min Drop kg	Stk .O2 %	Stk CO %	Stk CO2 %	Inc CO2 %	CO Fac g/kg	Stk AF	Inc AF	Comb Effic %
0	0	0	0	0	0	0	0	0	0	0	0	0	0.000	0.00	0.00	0.0	0.000	0.0	0.00	0	0.0	0.0	0.0
5	0	67	65	65	67	65	66	65	67	67	67	82	0.000	1.68	-1.68	20.9	0.008	0.0	0.01	0	91.0	90.7	0.0
10	5	123	68	70	68	64	78	66	68	68	68	198	0.000	1.59	0.13	17.9	0.045	3.0	2.77	15	28.0	29.5	97.8
15	10	216	85	87	77	64	106	70	68	68	68	385	0.000	1.36	0.32	14.9	0.089	6.0	5.70	16	16.6	17.3	97.7
20	15	318	113	115	94	66	141	422	68	68	68	526	0.000	1.04	0.50	11.0	0.443	9.7	10.63	53	10.6	9.8	92.8
25	20	288	126	124	117	73	145	1381	68	68	68	416	0.000	3.04	-1.72	7.7	0.137	13.1	11.78	11	8.4	9.2	98.3
30	25	283	141	137	173	90	165	1403	71	69	69	455	0.000	2.63	-1.77	7.6	0.355	13.1	13.69	31	8.3	7.9	95.6
35	30	290	156	143	189	124	181	1471	71	71	71	466	0.000	2.31	0.64	6.8	0.053	14.1	13.92	4	7.9	8.0	99.5
40	35	310	172	159	228	161	206	1518	71	71	71	484	0.000	1.90	0.69	7.3	0.049	13.6	14.05	3	8.2	8.0	99.5
45	40	337	187	172	254	202	230	1485	74	72	72	486	0.000	1.59	0.63	7.6	0.132	13.3	13.30	11	8.3	8.4	98.4
50	45	374	213	192	263	229	254	1351	72	72	72	413	0.000	5.62	-3.76	8.2	0.115	12.6	12.26	9	8.7	8.9	98.6
55	50	331	227	194	259	261	254	1647	75	72	75	509	0.000	9.07	-7.57	5.7	2.016	14.3	14.07	166	7.0	7.1	80.7
60	55	316	227	201	285	283	263	1678	75	75	75	533	0.000	8.62	0.81	4.8	1.544	15.4	15.47	118	6.7	6.6	85.4
65	60	316	227	214	290	296	269	1678	77	75	75	528	0.000	8.16	0.82	5.1	2.016	14.8	14.88	160	6.8	6.7	81.3
70	65	318	230	230	297	312	277	1723	77	75	75	531	0.000	7.76	0.77	5.0	1.579	15.2	15.25	122	6.8	6.8	85.0
75	70	319	230	243	306	334	286	1701	78	75	75	535	0.000	7.35	0.72	4.8	1.938	15.2	15.22	150	6.6	6.6	82.2
80	75	321	228	256	323	367	299	1717	78	76	78	533	0.000	6.94	0.77	5.1	0.809	15.5	15.56	61	7.0	7.0	91.8
85	80	328	235	269	328	400	312	1697	80	76	78	527	0.000	6.62	0.64	5.6	0.237	15.3	15.54	17	7.3	7.2	97.5
90	85	337	235	282	330	424	322	1693	78	76	78	525	0.000	6.26	0.63	5.8	0.122	15.1	15.02	8	7.4	7.5	98.8
95	90	350	239	298	320	441	330	1686	79	79	79	523	0.000	5.85	0.68	6.2	0.086	14.7	15.10	6	7.6	7.4	99.2
100	95	387	248	311	328	450	345	1665	79	77	79	517	0.000	5.53	0.64	6.5	0.070	14.4	14.39	5	7.8	7.8	99.3
105	100	409	255	333	322	455	355	1632	79	77	79	515	0.000	5.17	0.63	7.0	0.051	13.9	14.49	3	8.0	7.7	99.6
110	105	433	262	346	316	453	362	1691	79	79	79	511	0.000	4.81	0.63	6.5	0.070	14.4	14.92	4	7.8	7.5	99.4
115	110	440	266	360	329	453	370	1714	82	79	79	533	0.000	4.49	0.59	6.3	0.089	14.6	14.73	6	7.7	7.6	99.1
120	115	485	279	386	329	451	386	1637	82	80	80	546	0.000	4.04	0.72	5.1	0.310	15.7	15.82	22	7.1	7.1	96.8

Rec #	Tst .ET	Top Tmp F	Rht Avg F	Lft Tmp F	Bak Tmp F	Bot Tmp F	Avg Stove F	Ext1 F	Ext2 F	Ext3 F	Ext4 F	Stk Tmp F	Stk Drft "H2O	Scale kg	10min Drop kg	Stk .O2 %	Stk CO %	Stk CO2 %	Inc CO2 %	CO Fac g/kg	Stk AF	Inc AF	Comb Effic %
125	120	529	306	401	321	444	400	1635	82	80	80	531	0.000	3.63	0.77	5.8	0.623	14.8	15.04	49	7.3	7.3	93.3
130	125	529	321	406	317	436	402	1659	82	80	80	527	0.000	3.27	0.68	5.3	1.220	15.0	15.09	95	7.0	7.0	87.8
135	130	523	328	412	330	440	407	1675	82	80	80	516	0.000	2.95	0.63	5.9	0.559	14.8	14.92	44	7.4	7.3	94.0
140	135	518	334	417	328	438	407	1706	82	80	80	514	0.000	2.63	0.54	6.0	0.636	14.6	14.83	50	7.4	7.3	93.1
145	140	542	345	421	323	443	415	1655	82	80	80	508	0.000	2.36	0.54	6.3	0.383	14.5	14.97	30	7.6	7.3	95.8
150	145	557	360	417	317	445	419	1636	82	80	80	493	0.000	2.09	0.50	7.1	0.061	13.8	13.86	4	8.1	8.1	99.5

Rec #	Tst .ET	Top Tmp F	Rht Avg F	Lft Tmp F	Bak Tmp F	Bot Tmp F	Avg Stove F	Ext1 F	Ext2 F	Ext3 F	Ext4 F	Stk Tmp F	Stk Drft "H2O	Scale kg	10min Drop kg	Stk .O2 %	Stk CO %	Stk CO2 %	Inc CO2 %	CO Fac g/kg	Stk AF	Inc AF	Comb Effic %

* Real time data is presented at 5 minute intervals. Average values appearing in this report are based on more frequent measurements

Notes:

Results Table = HHT
Filename = DauntCatCord1909131
Test Stand A
ASTM Maple, nc

Stove Name: DauntCatCord Test Date: 9/13/2019 Run #: 2 File: DauntCatCord19 Record # Start 9 Stop 429

Test Time	420	min
Wet Wood	9.98	kg
Moisture	20.5	dry %
Dry Wood	8.28	kg
Coal Bed	1.36	kg
Stove DeltaT	-145	deg F
Tunnel CD	0.933	

Avg Stack Gasses (amb Corrected)

CO	0.461	%
CO2	8.48	%
O2	12.15	%
HC	n/m	% as CH4
TCC	0.92	% as CO2

Results

Real Time Data*

Rec #	Tst .ET	Top Tmp F	Rht Avg F	Lft Tmp F	Bak Tmp F	Bot Tmp F	Avg Stove F	Ext1 F	Ext2 F	Ext3 F	Ext4 F	Stk Tmp F	Stk Drft "H2O	Scale kg	10min Drop kg	Stk .O2 %	Stk CO %	Stk CO2 %	Inc CO2 %	CO Fac g/kg	Stk AF	Inc AF	Comb Effic %
0	0	0	0	0	0	0	0	0	0	0	0	0	0.000	0.00	0.00	0.0	0.000	0.0	0.00	0	0.0	0.0	0.0
5	5	482	368	389	263	439	388	1218	81	81	81	341	0.000	1.45	0.82	12.0	0.110	8.9	8.90	12	11.9	11.9	98.2
9	0	480	363	387	257	439	385	1175	83	81	81	333	0.000	5.49	-3.40	12.0	0.274	8.8	7.86	35	11.8	13.1	95.1
14	5	402	350	370	261	433	363	1526	81	81	81	372	0.000	11.11	-9.66	8.0	0.672	12.6	12.47	62	8.4	8.5	91.7
19	10	359	335	350	270	418	347	1503	81	81	81	377	0.000	10.88	0.41	9.0	0.153	11.9	11.20	14	9.2	9.7	98.0
24	15	331	320	331	262	398	328	1486	81	81	81	383	0.000	10.61	0.46	9.1	0.164	11.8	11.81	15	9.3	9.2	97.9
29	20	312	309	316	266	383	317	1524	81	81	81	370	0.000	10.34	0.50	9.1	0.098	11.8	11.73	8	9.3	9.3	98.8
34	25	303	301	301	266	373	309	1567	82	79	79	375	0.000	10.07	0.45	8.4	0.133	12.5	12.45	11	8.8	8.8	98.4
39	30	295	297	290	279	362	304	1561	80	80	80	381	0.000	9.84	0.45	8.0	0.422	12.8	12.74	37	8.5	8.5	94.8
44	35	292	292	282	273	353	299	1561	82	80	80	381	0.000	9.57	0.45	8.2	0.212	12.6	12.46	18	8.7	8.8	97.4
49	40	290	293	275	282	340	296	1523	82	80	80	382	0.000	9.30	0.50	8.2	0.114	12.7	12.47	9	8.7	8.8	98.7
54	45	295	291	273	293	336	297	1572	82	80	80	390	0.000	9.07	0.45	7.4	0.258	13.5	13.43	21	8.2	8.2	97.0
59	50	299	291	267	293	330	296	1581	80	80	80	397	0.000	8.80	0.45	7.1	0.391	13.6	13.53	33	8.0	8.0	95.4
64	55	312	291	267	289	328	297	1564	82	80	80	397	0.000	8.53	0.49	7.3	0.231	13.5	13.36	19	8.1	8.3	97.3
69	60	315	289	263	308	323	300	1603	82	82	80	404	0.000	8.21	0.54	6.8	0.902	13.7	13.74	77	7.7	7.9	89.9
74	65	323	291	265	310	321	302	1601	82	80	80	406	0.000	7.94	0.54	6.7	1.338	13.6	13.55	115	7.6	7.6	85.7
79	70	330	291	263	315	319	304	1599	82	80	80	400	0.000	7.66	0.55	7.1	0.486	13.6	13.61	41	8.0	7.8	94.4
84	75	332	293	263	311	317	303	1599	83	80	80	400	0.000	7.44	0.45	7.1	0.734	13.5	13.47	63	7.9	7.9	91.6
89	80	339	293	265	304	319	304	1597	81	83	83	398	0.000	7.17	0.45	7.0	0.916	13.4	13.33	79	7.8	7.9	89.6
94	85	352	298	265	302	317	307	1560	83	81	81	396	0.000	6.94	0.45	7.3	1.076	13.1	13.16	96	7.9	7.9	87.8
99	90	363	304	268	300	320	311	1509	83	81	81	387	0.000	6.71	0.41	8.2	0.441	12.5	12.75	40	8.6	8.5	94.4
104	95	376	309	270	307	318	316	1498	83	83	83	383	0.000	6.53	0.36	8.3	0.441	12.4	12.83	41	8.7	8.4	94.4
109	100	383	313	274	300	320	318	1487	83	83	83	379	0.000	6.26	0.45	8.8	0.348	12.0	12.26	33	9.0	8.8	95.4
114	105	389	320	274	289	318	318	1449	83	83	83	374	0.000	6.08	0.41	9.0	0.211	11.8	11.80	19	9.2	9.2	97.3
119	110	396	322	274	294	318	321	1417	83	83	83	368	0.000	5.90	0.36	9.6	0.208	11.3	11.46	20	9.6	9.4	97.2

Rec #	Tst .ET	Top Tmp F	Rht Avg F	Lft Tmp F	Bak Tmp F	Bot Tmp F	Avg Stove F	Ext1 F	Ext2 F	Ext3 F	Ext4 F	Stk Tmp F	Stk Drft "H2O	Scale kg	10min Drop kg	Stk .O2 %	Stk CO %	Stk CO2 %	Inc CO2 %	CO Fac g/kg	Stk AF	Inc AF	Comb Effic %
124	115	387	326	274	281	318	317	1402	83	83	81	363	0.000	5.76	0.32	9.7	0.086	11.2	11.38	7	9.7	9.6	99.0
129	120	381	331	274	270	318	315	1365	83	83	83	359	0.000	5.58	0.32	10.2	0.067	10.7	10.96	5	10.2	9.9	99.2
134	125	381	333	272	279	318	317	1337	83	83	83	355	0.000	5.40	0.31	10.3	0.084	10.6	10.78	7	10.2	10.1	99.0
139	130	383	340	275	270	316	317	1361	83	83	83	357	0.000	5.26	0.27	9.9	0.082	11.0	10.86	7	9.9	10.0	99.0
144	135	387	342	274	274	314	318	1293	83	83	83	348	0.000	5.08	0.27	10.5	0.104	10.4	10.15	9	10.4	10.5	98.6
149	140	387	348	275	259	314	317	1241	83	83	83	338	0.000	4.99	0.23	11.4	0.384	9.3	9.21	46	11.1	11.3	93.6
154	145	388	351	275	244	312	314	1167	83	83	83	325	0.000	4.85	0.23	12.4	0.334	8.3	8.44	45	12.3	12.2	93.8
159	150	390	355	273	247	307	314	1140	84	84	84	314	0.000	4.72	0.22	12.5	0.309	8.3	8.27	41	12.4	12.4	94.3
164	155	388	351	273	236	305	310	1142	84	81	84	312	0.000	4.58	0.23	12.3	0.339	8.5	8.47	45	12.1	12.1	93.8
169	160	385	353	270	227	305	308	1161	84	81	84	312	0.000	4.49	0.23	12.1	0.379	8.7	8.58	49	11.9	12.0	93.2
174	165	383	353	268	225	303	306	1179	83	81	81	312	0.000	4.35	0.23	11.8	0.280	9.0	8.98	34	11.6	11.6	95.2
179	170	381	355	268	218	303	305	1184	83	81	81	312	0.000	4.26	0.18	11.8	0.251	9.0	9.00	30	11.6	11.6	95.7
184	175	383	353	266	225	301	305	1202	83	81	81	314	0.000	4.13	0.22	11.0	0.120	9.9	9.59	12	10.8	11.1	98.3
189	180	392	351	266	229	301	308	1190	83	81	81	316	0.000	4.04	0.18	11.3	0.236	9.5	9.27	27	11.1	11.3	96.2
194	185	396	351	268	227	301	308	1186	83	81	81	318	0.000	3.90	0.18	11.3	0.172	9.5	9.39	19	11.1	11.3	97.3
199	190	396	351	268	231	303	310	1175	84	81	81	316	0.000	3.81	0.18	11.8	0.197	9.1	9.18	23	11.6	11.5	96.7
204	195	396	351	266	223	301	307	1188	83	81	81	316	0.000	3.67	0.18	11.6	0.086	9.3	9.24	8	11.5	11.5	98.8
209	200	399	351	268	223	301	308	1186	84	81	81	316	0.000	3.58	0.18	11.5	0.083	9.4	8.94	8	11.4	11.8	98.8
214	205	403	348	268	223	299	308	1237	81	81	81	320	0.000	3.45	0.22	11.1	0.125	9.8	9.65	13	10.9	11.1	98.2
219	210	401	349	270	227	297	309	1209	84	82	82	320	0.000	3.31	0.23	11.4	0.079	9.5	9.71	8	11.3	11.0	98.9
224	215	399	346	268	234	297	309	1171	84	82	82	314	0.000	3.22	0.23	12.0	0.087	8.9	8.86	9	11.9	12.0	98.7
229	220	392	346	270	225	296	306	1103	84	82	82	303	0.000	3.08	0.23	12.9	0.293	7.9	8.05	42	12.9	12.9	94.2
234	225	388	342	271	212	294	301	1056	82	82	82	292	0.000	2.99	0.18	13.4	0.271	7.4	7.33	41	13.7	13.8	94.3
239	230	386	342	273	203	294	300	984	84	82	82	283	0.000	2.95	0.13	14.1	0.472	6.6	6.73	81	14.6	14.5	89.4
244	235	383	340	273	210	294	300	935	84	82	82	275	0.000	2.90	0.09	14.2	0.564	6.5	6.44	100	14.7	14.8	87.3
249	240	388	338	273	199	292	298	914	82	82	82	266	0.000	2.86	0.09	14.1	0.639	6.5	6.55	113	14.4	14.6	85.9
254	245	390	336	273	193	292	297	885	82	82	82	260	0.000	2.77	0.13	14.2	0.704	6.4	6.37	128	14.6	14.7	84.4
259	250	409	336	277	188	290	300	856	82	82	82	257	0.000	2.68	0.13	13.5	1.146	6.9	6.94	195	13.2	13.2	78.2
264	255	455	336	288	206	288	314	1188	82	82	82	323	0.000	2.49	0.28	8.0	0.954	12.4	12.24	89	8.3	8.5	88.5
269	260	494	336	299	199	286	323	814	82	82	79	273	0.000	2.40	0.28	13.6	0.977	6.9	7.35	165	13.4	12.3	80.8
274	265	459	331	301	188	281	312	781	82	82	82	253	0.000	2.36	0.09	14.2	0.996	6.2	6.23	187	14.4	14.4	78.9
279	270	438	323	301	178	277	303	747	82	82	79	244	0.000	2.27	0.09	14.4	0.907	6.0	6.08	175	14.8	14.8	80.0
284	275	425	318	301	180	275	300	716	81	79	79	234	0.000	2.27	0.04	14.6	0.866	5.9	5.86	172	15.2	15.3	80.2
289	280	416	314	301	160	270	292	695	82	79	79	229	0.000	2.18	0.09	14.7	0.771	5.9	5.85	152	15.4	15.4	82.0
294	285	414	312	303	163	268	292	678	82	79	79	223	0.000	2.18	0.04	14.8	0.721	5.8	5.84	144	15.7	15.6	82.8
299	290	412	305	303	161	268	290	659	82	79	79	219	0.000	2.13	0.09	14.7	0.647	5.9	5.92	127	15.6	15.5	84.5
304	295	409	303	303	163	264	288	650	79	79	79	216	0.000	2.13	0.05	14.7	0.618	6.0	5.92	120	15.5	15.6	85.2
309	300	407	303	303	156	264	287	640	79	79	79	214	0.000	2.09	0.04	14.7	0.610	6.0	5.90	118	15.6	15.7	85.4
314	305	403	299	303	145	262	282	625	79	79	79	210	0.000	2.04	0.05	14.8	0.591	5.8	5.78	117	15.8	16.0	85.5
319	310	399	297	301	148	262	281	614	79	79	79	208	0.000	2.00	0.09	14.9	0.579	5.7	5.76	116	16.1	16.0	85.6
324	315	394	292	301	141	260	278	608	79	79	79	206	0.000	1.95	0.09	15.0	0.600	5.7	5.69	122	16.2	16.1	85.0
329	320	392	290	301	143	257	277	597	79	79	79	203	0.000	1.95	0.05	15.0	0.600	5.7	5.68	122	16.1	16.2	85.0
334	325	388	286	301	141	255	274	591	79	79	79	201	0.000	1.90	0.05	15.0	0.595	5.6	5.61	123	16.3	16.3	84.9
339	330	383	283	296	137	253	270	582	79	79	79	199	0.000	1.86	0.09	15.1	0.603	5.5	5.53	126	16.4	16.5	84.6
344	335	379	281	296	147	253	271	575	79	79	77	197	0.000	1.81	0.09	15.1	0.596	5.5	5.47	125	16.5	16.6	84.7
349	340	374	279	296	143	253	269	567	79	77	77	192	0.000	1.81	0.05	15.2	0.602	5.4	5.43	128	16.6	16.7	84.4
354	345	370	277	294	137	251	266	560	79	79	77	192	0.000	1.81	0.05	15.2	0.590	5.4	5.38	126	16.7	16.8	84.6

Rec #	Tst .ET	Top Tmp F	Rht Avg F	Lft Tmp F	Bak Tmp F	Bot Tmp F	Avg Stove F	Ext1 F	Ext2 F	Ext3 F	Ext4 F	Stk Tmp F	Stk Drft "H2O	Scale kg	10min Drop kg	Stk .O2 %	Stk CO %	Stk CO2 %	Inc CO2 %	CO Fac g/kg	Stk AF	Inc AF	Comb Effic %
359	350	366	274	292	130	251	262	554	79	79	77	190	0.000	1.77	0.04	15.4	0.600	5.2	5.26	132	17.1	17.2	83.9
364	355	363	272	292	134	251	262	545	79	79	77	186	0.000	1.68	0.09	15.4	0.596	5.2	5.19	132	17.2	17.3	83.9
369	360	361	270	292	138	248	262	534	79	77	77	186	0.000	1.63	0.09	15.4	0.613	5.2	5.19	136	17.2	17.2	83.6
374	365	361	270	287	136	248	261	528	79	77	77	184	0.000	1.63	0.05	15.5	0.591	5.1	5.11	134	17.5	17.5	83.8
379	370	359	265	285	130	246	257	521	79	77	77	181	0.000	1.63	0.00	15.6	0.567	5.1	5.10	128	17.5	17.6	84.4
384	375	357	265	283	136	246	257	513	77	77	77	177	0.000	1.59	0.04	15.6	0.558	5.1	5.08	125	17.5	17.7	84.6
389	380	357	263	281	128	244	254	506	77	77	77	175	0.000	1.59	0.04	15.6	0.579	5.0	5.00	133	17.7	17.8	83.8
394	385	354	261	278	132	244	254	500	77	77	77	175	0.000	1.54	0.05	15.6	0.570	5.0	5.03	131	17.7	17.7	84.1
399	390	352	261	278	130	244	253	495	76	76	76	175	0.000	1.54	0.05	15.7	0.556	4.9	4.93	131	18.0	18.0	84.1
404	395	352	259	276	125	239	250	499	76	76	76	172	0.000	1.50	0.04	15.8	0.636	4.8	4.79	153	18.1	18.2	81.9
409	400	349	258	273	127	237	249	497	76	76	76	170	0.000	1.50	0.00	15.9	0.610	4.8	4.79	148	18.3	18.3	82.5
414	405	349	256	273	131	234	249	495	76	76	76	170	0.000	1.45	0.05	15.9	0.595	4.7	4.75	145	18.4	18.4	82.7
419	410	347	254	271	125	234	246	496	76	76	76	169	0.000	1.41	0.04	15.9	0.586	4.7	4.76	143	18.5	18.4	82.9
424	415	342	253	269	118	232	243	492	75	75	75	169	0.000	1.41	0.04	16.0	0.568	4.7	4.59	141	18.7	19.0	83.1
429	420	340	251	266	120	229	241	483	75	73	75	167	0.000	1.36	0.05	16.2	0.551	4.5	4.54	141	19.3	19.1	83.0

Rec #	Tst .ET	Top Tmp F	Rht Avg F	Lft Tmp F	Bak Tmp F	Bot Tmp F	Avg Stove F	Ext1 F	Ext2 F	Ext3 F	Ext4 F	Stk Tmp F	Stk Drft "H2O	Scale kg	10min Drop kg	Stk .O2 %	Stk CO %	Stk CO2 %	Inc CO2 %	CO Fac g/kg	Stk AF	Inc AF	Comb Effic %

* Real time data is presented at 5 minute intervals. Average values appearing in this report are based on more frequent measurements

Notes:

Results Table = HHT
Filename = DauntCatCord1909132
Test Stand A
ASTM Maple,

Stove Name: DauntCatCord Test Date: 9/16/2019 Run #: 1 File: DauntCatCord19 Record # Start 5 Stop 166

Test Time	161	min
Wet Wood	8.16	kg
Moisture	21	dry %
Dry Wood	6.74	kg
Coal Bed	1.18	kg
Stove DeltaT	332	deg F
Tunnel CD	0.933	

Avg Stack Gasses (amb Corrected)

CO	0.642	%
CO2	11.09	%
O2	9.41	%
HC	n/m	% as CH4
TCC	1.28	% as CO2

Results

Real Time Data*

Rec #	Tst .ET	Top Tmp F	Rht Avg F	Lft Tmp F	Bak Tmp F	Bot Tmp F	Avg Stove F	Ext1 F	Ext2 F	Ext3 F	Ext4 F	Stk Tmp F	Stk Drft "H2O	Scale kg	10min Drop kg	Stk .O2 %	Stk CO %	Stk CO2 %	Inc CO2 %	CO Fac g/kg	Stk AF	Inc AF	Comb Effic %
0	0	0	0	0	0	0	0	0	0	0	0	0	0.000	0.00	0.00	0.0	0.000	0.0	0.00	0	0.0	0.0	0.0
5	0	74	72	72	68	70	71	72	72	72	72	112	0.000	1.63	-1.63	20.8	0.015	0.1	0.01	0	85.4	91.4	100.0
10	5	155	78	80	83	70	93	72	72	74	72	244	0.000	1.54	0.14	17.5	0.066	3.4	3.52	17	25.3	24.9	97.6
15	10	242	98	93	76	72	116	79	72	72	72	337	0.000	1.32	0.31	15.4	0.169	5.4	5.08	33	17.7	18.8	95.3
20	15	342	128	117	98	77	152	89	72	75	75	407	0.000	1.00	0.50	13.7	0.163	7.2	6.51	24	14.2	15.4	96.5
25	20	357	149	132	96	79	163	446	75	75	75	285	0.000	2.95	-1.68	15.8	0.164	5.1	5.74	34	18.7	17.0	95.2
30	25	309	160	135	120	92	163	1031	75	75	75	357	0.000	3.08	-2.08	11.6	0.377	9.2	9.10	47	11.3	11.4	93.6
35	30	292	165	139	145	109	170	1050	75	75	75	353	0.000	2.81	0.46	12.1	0.503	8.6	8.82	67	11.8	11.6	91.0
40	35	271	169	141	165	124	174	1248	75	75	75	394	0.000	2.54	0.50	13.1	0.201	7.8	9.52	28	13.2	11.1	96.0
45	40	275	176	148	174	141	183	1147	75	75	75	416	0.000	2.27	0.50	11.5	0.542	9.2	9.30	68	11.1	11.1	91.0
50	45	280	180	157	182	152	190	1184	78	76	76	377	0.000	1.95	0.54	13.9	0.711	6.6	6.50	125	14.2	14.3	84.7
55	50	280	183	163	200	167	199	1416	78	76	76	430	0.000	1.72	0.50	9.4	0.059	11.5	10.54	4	9.5	10.3	99.4
60	55	295	187	174	204	180	208	1219	78	76	78	423	0.000	1.45	0.50	12.9	0.269	7.9	8.02	38	13.0	12.7	94.7
65	60	319	196	194	209	187	221	1151	78	76	76	410	0.000	1.22	0.41	13.0	0.519	7.7	7.40	77	12.9	13.4	89.8
70	65	300	198	200	202	200	220	1592	78	76	76	443	0.000	8.98	-7.57	7.3	2.016	12.6	13.62	187	7.7	7.2	78.9
75	70	291	196	205	237	215	229	1610	78	76	76	489	0.000	8.53	-7.21	5.6	0.972	14.8	14.55	76	7.2	6.9	90.0
80	75	298	198	215	257	228	239	1545	78	78	78	499	0.000	8.03	0.86	5.8	2.016	14.2	14.26	167	7.0	7.0	80.6
85	80	311	203	233	270	242	252	1590	79	77	77	504	0.000	7.57	0.87	6.0	2.016	13.9	14.13	170	7.1	7.0	80.4
90	85	322	207	248	272	257	261	1614	79	79	79	517	0.000	7.12	0.82	5.5	1.594	14.6	14.81	128	7.0	7.0	84.4
95	90	346	211	268	292	272	278	1632	79	79	79	521	0.000	6.71	0.77	5.9	0.424	14.9	14.94	32	7.4	7.4	95.5
100	95	387	220	285	294	290	295	1606	79	79	79	530	0.000	6.21	0.82	5.3	2.016	14.6	14.70	162	6.8	6.8	81.1
105	100	442	233	314	296	303	318	1466	79	79	79	545	0.000	5.76	0.82	5.0	1.102	15.4	15.58	84	6.9	6.8	89.1
110	105	511	251	344	301	316	344	1375	79	79	79	539	0.000	5.40	0.72	6.1	0.866	14.5	14.58	69	7.4	7.3	90.8
115	110	563	270	377	310	325	369	1373	81	79	79	537	0.000	4.94	0.77	5.8	0.796	14.8	14.83	63	7.3	7.3	91.6
120	115	582	292	403	284	331	379	1277	82	80	80	501	0.000	4.54	0.77	6.6	0.999	13.9	12.86	84	7.6	8.1	89.1

Rec #	Tst .ET	Top Tmp F	Rht Avg F	Lft Tmp F	Bak Tmp F	Bot Tmp F	Avg Stove F	Ext1 F	Ext2 F	Ext3 F	Ext4 F	Stk Tmp F	Stk Drft "H2O	Scale kg	10min Drop kg	Stk .O2 %	Stk CO %	Stk CO2 %	Inc CO2 %	CO Fac g/kg	Stk AF	Inc AF	Comb Effic %
125	120	589	303	425	275	336	386	1283	82	80	80	483	0.000	4.22	0.63	8.1	0.775	12.5	12.48	72	8.4	8.4	90.5
130	125	593	316	447	277	336	394	1334	82	80	80	488	0.000	3.90	0.59	7.5	0.607	13.1	13.40	53	8.2	8.1	92.8
135	130	595	323	464	269	338	398	1422	82	80	80	488	0.000	3.54	0.59	7.4	0.117	13.5	13.45	8	8.2	8.2	98.8
140	135	596	330	473	262	341	400	1465	82	80	80	484	0.000	3.27	0.54	7.5	0.064	13.4	13.39	4	8.3	8.3	99.4
145	140	598	336	477	271	340	404	1525	82	80	82	486	0.000	2.95	0.50	7.1	0.055	13.8	13.98	3	8.1	8.0	99.5
150	145	594	341	480	276	343	407	1453	82	80	80	475	0.000	2.68	0.54	8.0	0.049	12.9	12.47	3	8.6	8.9	99.6
155	150	592	343	478	271	341	405	1436	82	80	80	469	0.000	2.45	0.45	8.9	0.047	12.0	12.05	3	9.2	9.2	99.6
160	155	596	347	471	259	343	403	1415	83	80	80	467	0.000	2.22	0.41	8.2	0.055	12.7	12.50	3	8.7	8.8	99.5
165	160	590	363	460	256	343	402	1370	83	80	80	454	0.000	2.00	0.40	9.3	0.052	11.6	12.01	3	9.5	9.2	99.5
166	161	590	367	460	267	341	405	1345	83	83	83	450	0.000	1.95	0.41	9.3	0.052	11.6	11.19	3	9.5	9.8	99.5

Rec #	Tst .ET	Top Tmp F	Rht Avg F	Lft Tmp F	Bak Tmp F	Bot Tmp F	Avg Stove F	Ext1 F	Ext2 F	Ext3 F	Ext4 F	Stk Tmp F	Stk Drft "H2O	Scale kg	10min Drop kg	Stk .O2 %	Stk CO %	Stk CO2 %	Inc CO2 %	CO Fac g/kg	Stk AF	Inc AF	Comb Effic %

* Real time data is presented at 5 minute intervals. Average values appearing in this report are based on more frequent measurements

Notes:

Results Table = HHT
Filename = DauntCatCord1909161
Test Stand A
ASTM Beech, High

Stove Name: DauntCatCord Test Date: 9/16/2019 Run #: 2 File: DauntCatCord19 Record # Start 19 Stop 436

Test Time	417	min
Wet Wood	10.24	kg
Moisture	21	dry %
Dry Wood	8.46	kg
Coal Bed	1.41	kg
Stove DeltaT	-138	deg F
Tunnel CD	0.933	

Avg Stack Gasses (amb Corrected)

CO	0.437	%
CO2	8.22	%
O2	12.41	%
HC	n/m	% as CH4
TCC	0.87	% as CO2

Results

Real Time Data*

Rec #	Tst .ET	Top Tmp F	Rht Avg F	Lft Tmp F	Bak Tmp F	Bot Tmp F	Avg Stove F	Ext1 F	Ext2 F	Ext3 F	Ext4 F	Stk Tmp F	Stk Drft "H2O	Scale kg	10min Drop kg	Stk .O2 %	Stk CO %	Stk CO2 %	Inc CO2 %	CO Fac g/kg	Stk AF	Inc AF	Comb Effic %
0	0	0	0	0	0	0	0	0	0	0	0	0	0.000	0.00	0.00	0.0	0.000	0.0	0.00	0	0.0	0.0	0.0
5	5	515	389	413	215	337	374	1098	83	81	81	328	0.000	1.63	0.50	13.0	0.378	7.7	7.72	55	13.0	13.0	92.5
10	10	493	387	402	215	335	366	958	83	81	81	313	0.000	1.59	0.13	13.5	0.584	7.2	6.93	94	13.5	13.8	88.0
15	15	482	385	389	211	335	360	874	81	81	81	293	0.000	1.50	0.13	14.1	0.604	6.6	6.53	106	14.5	14.5	86.6
19	0	480	385	383	205	333	357	807	81	81	81	294	0.000	2.09	-0.50	14.4	0.493	6.3	6.40	89	15.1	14.8	88.5
24	5	396	374	363	207	331	334	1189	83	81	81	320	0.000	11.47	-9.97	11.5	0.350	9.3	9.19	42	11.2	11.3	94.1
29	10	346	355	341	224	324	318	1339	81	81	79	339	0.000	11.29	0.37	10.6	0.123	10.3	9.88	12	10.4	10.8	98.3
34	15	313	333	320	229	316	302	1447	81	81	81	359	0.000	11.02	0.45	9.8	0.062	11.1	11.29	4	9.8	9.7	99.4
39	20	290	313	303	233	309	290	1434	83	81	81	372	0.000	10.79	0.46	9.2	0.059	11.7	11.71	4	9.4	9.4	99.4
44	25	279	298	290	246	303	283	1417	81	81	79	372	0.000	10.52	0.46	9.9	0.057	11.0	10.97	4	9.9	10.0	99.4
49	30	270	285	279	253	298	277	1390	81	79	81	374	0.000	10.29	0.46	10.7	0.055	10.2	10.35	4	10.6	10.5	99.4
54	35	261	274	272	246	292	269	1411	81	81	81	372	0.000	10.07	0.41	10.5	0.053	10.5	10.58	4	10.4	10.3	99.4
59	40	257	266	264	257	285	266	1432	81	81	81	374	0.000	9.84	0.41	10.5	0.055	10.5	10.42	4	10.4	10.4	99.5
64	45	255	260	260	249	281	261	1481	81	81	81	379	0.000	9.61	0.41	9.9	0.056	11.1	11.13	4	9.9	9.8	99.4
69	50	255	253	255	251	279	259	1503	81	81	81	385	0.000	9.34	0.46	9.4	0.058	11.5	11.37	4	9.5	9.6	99.4
74	55	255	249	251	255	277	258	1520	82	82	82	392	0.000	9.12	0.40	9.3	0.058	11.7	11.69	4	9.4	9.4	99.4
79	60	260	247	249	277	275	262	1574	82	82	82	397	0.000	8.84	0.46	8.4	0.069	12.5	12.11	5	8.8	9.1	99.3
84	65	266	247	251	286	273	265	1646	82	82	82	431	0.000	8.57	0.45	6.6	1.237	13.7	13.72	106	7.6	7.4	86.7
89	70	282	247	251	299	273	270	1668	84	82	82	416	0.000	8.25	0.55	8.2	0.306	12.6	12.90	27	8.6	8.4	96.2
94	75	290	247	255	303	275	274	1670	82	82	82	418	0.000	8.03	0.45	7.6	0.343	13.1	13.12	29	8.3	8.3	95.9
99	80	299	247	260	301	273	276	1607	82	82	82	412	0.000	7.76	0.45	7.9	0.243	12.9	13.24	20	8.5	8.2	97.1
104	85	310	251	264	299	275	280	1553	82	82	82	403	0.000	7.53	0.41	9.1	0.076	11.8	11.79	6	9.3	9.3	99.2
109	90	318	251	271	299	275	283	1559	82	82	82	397	0.000	7.30	0.41	9.4	0.073	11.5	11.66	5	9.5	9.4	99.2
114	95	336	251	275	288	277	285	1570	84	82	82	403	0.000	7.07	0.41	9.3	0.067	11.6	11.81	5	9.5	9.3	99.3
119	100	368	256	284	297	279	297	1454	84	82	82	392	0.000	6.85	0.41	10.1	0.061	10.8	11.21	5	10.1	9.8	99.3

Rec #	Tst .ET	Top Tmp F	Rht Avg F	Lft Tmp F	Bak Tmp F	Bot Tmp F	Avg Stove F	Ext1 F	Ext2 F	Ext3 F	Ext4 F	Stk Tmp F	Stk Drft "H2O	Scale kg	10min Drop kg	Stk .O2 %	Stk CO %	Stk CO2 %	Inc CO2 %	CO Fac g/kg	Stk AF	Inc AF	Comb Effic %
124	105	358	258	286	284	279	293	1475	84	82	84	388	0.000	6.67	0.36	9.9	0.057	11.0	11.18	4	9.9	9.8	99.5
129	110	355	258	290	277	277	292	1488	84	82	82	386	0.000	6.44	0.36	9.5	0.253	11.3	11.41	24	9.5	9.5	96.5
134	115	355	258	295	275	280	293	1523	84	82	82	386	0.000	6.26	0.36	9.2	0.069	11.7	11.57	5	9.4	9.5	99.3
139	120	355	258	297	282	279	294	1563	84	82	84	390	0.000	6.03	0.36	8.6	0.283	12.2	12.04	26	8.9	9.1	96.3
144	125	364	258	306	280	280	297	1609	84	82	82	403	0.000	5.90	0.31	7.7	0.276	13.1	13.34	23	8.3	8.3	96.7
149	130	401	260	316	290	279	309	1605	84	82	84	418	0.000	5.62	0.37	6.7	0.788	13.9	13.94	66	7.7	7.7	91.2
154	135	518	269	334	299	282	340	1538	84	82	82	429	0.000	5.31	0.49	6.0	1.195	14.4	14.29	97	7.3	7.1	87.6
159	140	567	280	351	303	282	357	1546	84	84	82	425	0.000	4.99	0.59	6.5	0.794	14.0	14.07	65	7.6	7.1	91.3
164	145	546	293	356	306	280	356	1463	84	84	84	406	0.000	4.76	0.46	7.6	0.101	13.3	12.90	7	8.3	8.6	99.0
169	150	535	299	358	295	275	352	1370	84	84	84	386	0.000	4.58	0.36	9.9	0.205	11.0	10.98	20	9.8	9.9	97.1
174	155	522	308	356	275	275	347	1427	84	84	84	388	0.000	4.40	0.32	9.3	0.112	11.6	11.73	9	9.4	9.3	98.7
179	160	514	314	356	273	273	346	1510	84	82	82	397	0.000	4.17	0.37	7.5	0.635	13.2	12.80	55	8.1	8.5	92.5
184	165	503	319	353	280	269	345	1538	84	82	82	406	0.000	3.90	0.41	6.7	2.011	13.2	13.18	179	7.4	7.6	79.6
189	170	514	323	353	286	269	349	1491	84	82	84	399	0.000	3.67	0.46	8.2	0.308	12.6	12.91	27	8.6	8.3	96.2
194	175	527	330	356	280	267	352	1488	84	82	84	388	0.000	3.49	0.36	8.3	0.299	12.5	12.33	27	8.7	8.8	96.2
199	180	535	332	358	275	267	353	1378	84	82	84	377	0.000	3.36	0.31	9.7	0.174	11.1	11.15	16	9.7	9.7	97.7
204	185	537	334	360	271	267	354	1359	84	84	82	371	0.000	3.22	0.27	9.7	0.163	11.2	11.10	15	9.7	9.8	97.8
209	190	531	336	362	254	264	349	1332	84	82	82	366	0.000	3.08	0.23	10.1	0.269	10.7	10.85	28	10.0	9.9	96.1
214	195	570	343	366	254	262	359	1032	84	82	82	336	0.000	2.95	0.22	12.1	1.338	8.2	8.15	191	11.3	11.4	78.5
219	200	544	345	369	243	260	352	970	84	82	82	316	0.000	2.86	0.18	13.2	0.914	7.2	7.30	147	13.0	12.8	82.5
224	205	507	345	362	223	260	339	1011	84	82	82	306	0.000	2.77	0.13	13.3	0.899	7.2	7.33	145	13.1	13.1	82.7
229	210	481	343	360	217	258	332	1001	84	82	82	301	0.000	2.72	0.09	13.0	0.263	7.8	7.83	37	13.1	13.0	94.8
234	215	468	340	356	213	256	327	978	84	82	82	297	0.000	2.68	0.09	13.3	0.256	7.6	7.57	37	13.4	13.5	94.9
239	220	460	340	351	202	256	322	951	82	82	82	290	0.000	2.63	0.09	13.5	0.274	7.3	7.38	42	13.8	13.7	94.2
244	225	451	340	349	200	254	319	917	82	82	82	284	0.000	2.54	0.14	13.7	0.361	7.0	7.01	57	14.1	14.1	92.2
249	230	447	340	345	197	254	317	883	82	82	82	280	0.000	2.49	0.14	13.9	0.443	6.8	6.88	74	14.3	14.3	90.2
254	235	440	342	342	191	251	313	854	82	80	82	273	0.000	2.45	0.09	14.1	0.483	6.6	6.61	83	14.6	14.6	89.2
259	240	436	338	338	178	251	308	821	82	80	80	264	0.000	2.45	0.04	14.3	0.580	6.4	6.38	105	14.8	14.9	86.8
264	245	434	338	336	172	251	306	788	82	80	80	258	0.000	2.40	0.05	14.5	0.639	6.1	6.14	120	15.1	15.2	85.2
269	250	429	336	334	178	249	305	758	82	80	80	251	0.000	2.36	0.09	14.7	0.680	5.9	6.02	132	15.4	15.3	84.0
274	255	425	334	332	163	247	300	733	82	80	80	247	0.000	2.31	0.09	14.8	0.688	5.8	5.82	136	15.7	15.7	83.6
279	260	421	332	329	174	247	300	710	82	80	80	240	0.000	2.27	0.09	14.9	0.653	5.7	5.76	133	16.0	15.9	83.9
284	265	414	329	325	161	245	295	689	82	80	80	236	0.000	2.22	0.09	15.0	0.639	5.6	5.62	131	16.2	16.2	84.0
289	270	412	327	323	167	243	294	672	82	80	80	232	0.000	2.22	0.05	15.1	0.628	5.5	5.56	132	16.5	16.4	84.0
294	275	407	327	318	159	243	291	655	80	80	80	227	0.000	2.18	0.09	15.2	0.615	5.4	5.42	131	16.7	16.7	84.1
299	280	403	323	316	161	243	289	644	80	80	80	223	0.000	2.13	0.09	15.3	0.609	5.3	5.40	131	16.9	16.7	84.1
304	285	399	318	312	156	240	285	631	80	80	80	221	0.000	2.13	0.05	15.4	0.615	5.3	5.27	134	17.0	17.0	83.8
309	290	392	318	310	154	236	282	619	80	80	80	219	0.000	2.09	0.04	15.4	0.608	5.2	5.23	133	17.1	17.1	83.8
314	295	390	316	307	141	236	278	608	79	79	79	214	0.000	2.04	0.05	15.5	0.595	5.2	5.13	132	17.3	17.4	83.9
319	300	388	314	303	141	234	276	597	79	79	79	212	0.000	2.00	0.09	15.6	0.592	5.0	5.03	135	17.7	17.7	83.6
324	305	385	312	301	147	234	276	612	79	79	79	210	0.000	2.00	0.04	15.5	0.739	5.1	5.33	168	17.2	16.4	80.5
329	310	388	309	298	145	234	275	635	79	79	79	212	0.000	1.95	0.05	14.9	0.786	5.6	5.68	162	15.8	15.7	81.1
334	315	387	307	296	143	229	273	652	79	79	79	210	0.000	1.90	0.10	14.9	0.709	5.7	5.70	144	15.9	15.9	82.8
339	320	387	300	294	141	229	270	644	79	77	77	212	0.000	1.86	0.09	15.1	0.659	5.5	5.60	137	16.3	16.2	83.5
344	325	387	303	292	143	227	270	648	79	79	77	212	0.000	1.81	0.09	15.1	0.651	5.5	5.40	137	16.5	16.7	83.4
349	330	383	300	292	147	227	270	626	79	79	79	212	0.000	1.81	0.05	15.6	0.663	5.0	5.06	153	17.5	17.5	82.0
354	335	383	298	287	147	224	268	613	79	77	79	207	0.000	1.77	0.09	15.7	0.643	4.9	4.94	151	17.8	17.8	82.1

Rec #	Tst .ET	Top Tmp F	Rht Avg F	Lft Tmp F	Bak Tmp F	Bot Tmp F	Avg Stove F	Ext1 F	Ext2 F	Ext3 F	Ext4 F	Stk Tmp F	Stk Drft "H2O	Scale kg	10min Drop kg	Stk .O2 %	Stk CO %	Stk CO2 %	Inc CO2 %	CO Fac g/kg	Stk AF	Inc AF	Comb Effic %
359	340	378	296	287	140	222	265	620	79	79	79	207	0.000	1.72	0.09	15.7	0.617	4.9	4.91	146	18.0	18.0	82.6
364	345	376	291	285	144	224	264	598	78	76	76	205	0.000	1.68	0.09	15.9	0.616	4.7	4.70	149	18.3	18.5	82.3
369	350	371	289	282	142	222	261	583	78	76	76	200	0.000	1.68	0.04	16.1	0.593	4.5	4.55	152	19.0	19.0	82.1
374	355	367	287	280	131	220	257	566	78	76	76	200	0.000	1.63	0.05	16.2	0.591	4.4	4.36	156	19.4	19.6	81.7
379	360	362	282	278	142	217	256	553	76	76	76	198	0.000	1.63	0.05	16.5	0.568	4.2	4.26	155	20.1	19.9	81.7
384	365	360	280	273	140	217	254	535	78	76	76	193	0.000	1.63	0.00	16.6	0.548	4.1	4.03	156	20.7	20.8	81.7
389	370	354	278	271	138	215	251	525	78	76	76	191	0.000	1.59	0.04	16.7	0.528	4.0	3.98	154	21.1	21.1	81.9
394	375	349	273	269	137	212	248	514	78	75	75	189	0.000	1.59	0.00	16.8	0.518	3.9	3.86	153	21.4	21.6	81.9
399	380	342	271	264	137	210	245	505	75	75	75	184	0.000	1.54	0.05	17.0	0.505	3.7	3.75	157	22.2	22.0	81.6
404	385	338	266	260	130	210	241	492	75	75	75	182	0.000	1.54	0.05	17.1	0.496	3.6	3.59	158	22.6	22.7	81.5
409	390	331	264	255	126	208	237	479	75	75	75	178	0.000	1.50	0.04	17.3	0.469	3.4	3.39	160	23.8	23.7	81.3
414	395	324	259	251	130	208	234	468	75	75	75	175	0.000	1.50	0.04	17.4	0.456	3.3	3.28	159	24.1	24.3	81.4
419	400	320	255	246	130	203	231	454	75	75	75	171	0.000	1.50	0.00	17.5	0.442	3.2	3.19	160	24.8	24.8	81.3
424	405	313	253	244	115	201	225	444	75	75	75	166	0.000	1.45	0.05	17.6	0.443	3.1	3.08	164	25.1	25.4	80.9
429	410	309	248	239	123	198	224	437	74	74	74	166	0.000	1.45	0.05	17.6	0.435	3.1	3.09	162	25.3	25.3	81.1
434	415	302	246	235	121	196	220	426	74	74	74	162	0.000	1.45	0.00	17.7	0.422	3.0	2.95	161	25.9	26.2	81.2
436	417	302	244	235	117	196	219	421	74	74	74	162	0.000	1.41	0.04	17.8	0.416	2.9	2.92	163	26.2	26.4	81.0

Rec #	Tst .ET	Top Tmp F	Rht Avg F	Lft Tmp F	Bak Tmp F	Bot Tmp F	Avg Stove F	Ext1 F	Ext2 F	Ext3 F	Ext4 F	Stk Tmp F	Stk Drft "H2O	Scale kg	10min Drop kg	Stk .O2 %	Stk CO %	Stk CO2 %	Inc CO2 %	CO Fac g/kg	Stk AF	Inc AF	Comb Effic %

* Real time data is presented at 5 minute intervals. Average values appearing in this report are based on more frequent measurements

Notes:

Results Table = HHT
Filename = DauntCatCord1909162
Test Stand A
ASTM beech, Low

Stove Name: DauntCatCord Test Date: 9/19/2019 Run #: 1 File: DauntCatCord19 Record # Start 4 Stop 149

Test Time	145	min
Wet Wood	7.99	kg
Moisture	21	dry %
Dry Wood	6.60	kg
Coal Bed	1.32	kg
Stove DeltaT	329	deg F
Tunnel CD	0.933	

Avg Stack Gasses (amb Corrected)

CO	0.449	%
CO2	11.70	%
O2	8.89	%
HC	n/m	% as CH4
TCC	0.90	% as CO2

Results

Real Time Data*

Rec #	Tst .ET	Top Tmp F	Rht Avg F	Lft Tmp F	Bak Tmp F	Bot Tmp F	Avg Stove F	Ext1 F	Ext2 F	Ext3 F	Ext4 F	Stk Tmp F	Stk Drft "H2O	Scale kg	10min Drop kg	Stk .O2 %	Stk CO %	Stk CO2 %	Inc CO2 %	CO Fac g/kg	Stk AF	Inc AF	Comb Effic %
0	0	0	0	0	0	0	0	0	0	0	0	0	0.000	0.00	0.00	0.0	0.000	0.0	0.00	0	0.0	0.0	0.0
4	0	72	66	68	66	66	68	66	68	68	68	121	0.000	0.54	-0.54	20.9	0.011	0.0	0.01	0	91.5	91.4	0.0
9	5	139	72	75	75	66	85	68	70	68	68	222	0.000	1.36	-1.36	17.9	0.109	3.0	3.09	39	27.7	27.3	94.5
14	10	233	85	90	85	66	112	75	68	68	68	444	0.000	1.09	0.36	15.3	0.214	5.5	6.15	44	17.5	15.9	93.9
19	15	346	115	120	103	69	150	90	71	71	71	669	0.000	0.63	0.69	9.3	0.358	11.4	9.83	36	9.4	10.7	95.0
24	20	333	128	137	101	75	155	652	71	71	71	299	0.000	2.81	-1.77	15.9	0.888	4.6	6.03	229	18.1	14.9	75.5
29	25	292	131	137	111	88	152	1231	71	71	71	360	0.000	2.54	-2.00	11.4	0.402	9.3	7.42	49	11.1	13.4	93.2
34	30	275	137	142	152	103	162	1340	71	71	71	425	0.000	2.22	0.55	8.8	0.105	12.1	12.18	9	9.1	9.0	98.7
39	35	291	146	157	174	120	178	1259	71	71	71	414	0.000	1.90	0.59	10.4	0.515	10.3	10.09	58	10.1	10.3	92.2
44	40	310	153	176	176	136	190	1228	72	72	72	410	0.000	1.63	0.55	10.8	0.408	9.9	9.66	47	10.5	10.8	93.5
49	45	330	161	198	192	157	208	1253	72	72	72	417	0.000	1.36	0.50	10.2	0.181	10.6	10.94	19	10.1	9.9	97.3
54	50	311	168	209	205	181	215	1543	74	72	72	458	0.000	9.02	-7.43	7.1	0.463	13.6	13.87	39	7.9	7.7	94.5
59	55	307	170	220	222	203	224	1453	72	72	72	497	0.000	8.62	-5.08	6.3	0.623	14.4	14.22	50	7.5	7.4	93.1
64	60	318	175	240	248	220	240	1489	74	72	72	511	0.000	8.21	0.72	5.8	0.283	15.0	15.07	21	7.4	7.4	97.0
69	65	333	179	266	274	238	258	1615	75	75	75	519	0.000	7.76	0.77	5.3	0.235	15.5	15.20	17	7.2	7.4	97.6
74	70	346	186	288	285	255	272	1637	75	73	73	522	0.000	7.30	0.82	6.0	0.121	14.9	14.99	8	7.5	7.5	98.8
79	75	364	195	310	290	275	287	1570	75	75	75	535	0.000	6.89	0.77	5.6	0.123	15.3	15.28	8	7.3	7.3	98.8
84	80	375	201	329	290	290	297	1617	75	75	75	535	0.000	6.44	0.77	5.7	0.126	15.2	15.19	9	7.4	7.4	98.7
89	85	390	212	349	299	312	312	1642	77	75	75	535	0.000	6.03	0.77	5.9	0.088	15.0	15.10	6	7.5	7.4	99.2
94	90	405	217	362	306	327	323	1646	77	75	75	544	0.000	5.58	0.77	5.0	0.258	15.9	15.71	18	7.0	7.1	97.4
99	95	432	228	382	306	343	338	1631	78	78	76	531	0.000	5.17	0.77	6.4	0.304	14.4	14.50	24	7.7	7.7	96.6
104	100	484	243	406	304	356	359	1444	78	78	78	531	0.000	4.81	0.68	5.7	0.897	14.8	14.47	71	7.2	7.5	90.6
109	105	534	258	432	293	365	376	1376	78	76	78	540	0.000	4.35	0.77	5.2	2.016	14.8	15.09	161	6.8	6.7	81.2
114	110	559	278	449	293	365	389	1489	78	78	78	534	0.000	3.95	0.77	5.7	0.742	14.8	14.74	58	7.3	7.0	92.1
119	115	560	304	448	293	365	394	1592	81	78	78	530	0.000	3.54	0.72	5.5	1.171	14.9	14.70	92	7.1	7.2	88.1

Rec #	Tst .ET	Top Tmp F	Rht Avg F	Lft Tmp F	Bak Tmp F	Bot Tmp F	Avg Stove F	Ext1 F	Ext2 F	Ext3 F	Ext4 F	Stk Tmp F	Stk Drft "H2O	Scale kg	10min Drop kg	Stk .O2 %	Stk CO %	Stk CO2 %	Inc CO2 %	CO Fac g/kg	Stk AF	Inc AF	Comb Effic %
124	120	551	315	452	283	363	393	1483	81	78	78	504	0.000	3.22	0.63	6.5	0.326	14.3	13.94	26	7.7	8.0	96.3
129	125	586	328	465	283	363	405	1245	81	79	79	480	0.000	2.90	0.59	9.4	0.524	11.3	12.36	54	9.4	8.9	92.7
134	130	599	335	478	248	363	405	1098	81	79	79	441	0.000	2.68	0.45	10.9	1.236	9.4	9.30	155	10.3	10.4	81.8
139	135	597	342	487	242	361	406	1119	79	79	79	424	0.000	2.49	0.37	11.1	1.142	9.3	9.14	144	10.4	10.5	82.7
144	140	584	342	489	227	357	400	1239	79	79	79	433	0.000	2.22	0.41	10.7	0.794	9.8	9.96	94	10.3	10.2	87.9
149	145	582	342	485	221	353	396	1243	79	79	79	435	0.000	2.04	0.41	10.6	0.199	10.2	10.31	21	10.5	10.4	96.9

Rec #	Tst .ET	Top Tmp F	Rht Avg F	Lft Tmp F	Bak Tmp F	Bot Tmp F	Avg Stove F	Ext1 F	Ext2 F	Ext3 F	Ext4 F	Stk Tmp F	Stk Drft "H2O	Scale kg	10min Drop kg	Stk .O2 %	Stk CO %	Stk CO2 %	Inc CO2 %	CO Fac g/kg	Stk AF	Inc AF	Comb Effic %

* Real time data is presented at 5 minute intervals. Average values appearing in this report are based on more frequent measurements

Notes:

Results Table = HHT
Filename = DauntCatCord1909191
Test Stand A
ASTM beech, hi, new door gasket

Stove Name: DauntCatCord Test Date: 9/19/2019 Run #: 2 File: DauntCatCord19 Record # Start 18 Stop 403

Test Time	385	min
Wet Wood	9.8	kg
Moisture	21	dry %
Dry Wood	8.10	kg
Coal Bed	1.41	kg
Stove DeltaT	-118	deg F
Tunnel CD	0.933	

Avg Stack Gasses (amb Corrected)

CO	0.354	%
CO2	8.68	%
O2	11.98	%
HC	n/m	% as CH4
TCC	0.71	% as CO2

Results

Real Time Data*

Rec #	Tst .ET	Top Tmp F	Rht Avg F	Lft Tmp F	Bak Tmp F	Bot Tmp F	Avg Stove F	Ext1 F	Ext2 F	Ext3 F	Ext4 F	Stk Tmp F	Stk Drft "H2O	Scale kg	10min Drop kg	Stk .O2 %	Stk CO %	Stk CO2 %	Inc CO2 %	CO Fac g/kg	Stk AF	Inc AF	Comb Effic %
0	0	0	0	0	0	0	0	0	0	0	0	0	0.000	0.00	0.00	0.0	0.000	0.0	0.00	0	0.0	0.0	0.0
5	5	513	336	446	223	340	372	1308	79	79	79	353	0.000	1.68	0.54	9.2	0.345	11.6	11.08	34	9.3	9.6	95.2
10	10	496	331	431	225	336	364	1277	79	79	79	351	0.000	1.54	0.27	10.6	0.186	10.3	10.10	20	10.4	10.6	97.2
15	15	481	329	418	230	329	358	1196	80	80	80	336	0.000	1.50	0.18	12.3	0.282	8.5	8.98	37	12.1	11.7	94.8
18	0	473	327	412	232	325	354	1172	80	80	80	319	0.000	6.39	-4.80	12.4	0.269	8.4	8.33	36	12.3	12.4	94.9
23	5	393	317	384	232	319	329	1382	80	80	80	328	0.000	11.02	-9.57	11.4	0.058	9.5	9.68	6	11.3	11.1	99.2
28	10	347	299	358	232	310	309	1378	80	80	80	343	0.000	10.79	0.41	11.3	0.051	9.6	9.58	4	11.2	11.2	99.4
33	15	315	286	334	234	304	295	1395	80	80	80	358	0.000	10.61	0.37	10.3	0.043	10.6	11.50	3	10.3	9.5	99.6
38	20	295	274	315	239	297	284	1400	80	80	80	363	0.000	10.39	0.40	11.0	0.049	9.9	9.86	4	10.9	10.9	99.4
43	25	282	263	295	252	291	277	1438	80	80	80	371	0.000	10.16	0.41	10.4	0.042	10.5	10.22	3	10.3	10.6	99.6
48	30	276	252	285	246	283	268	1440	81	81	81	376	0.000	9.93	0.41	10.1	0.044	10.8	10.56	3	10.1	10.3	99.6
53	35	283	246	272	261	278	268	1402	81	79	81	378	0.000	9.66	0.45	10.7	0.052	10.2	10.88	4	10.6	10.0	99.4
58	40	287	242	265	252	272	264	1474	81	81	81	385	0.000	9.43	0.46	10.1	0.046	10.8	11.06	3	10.1	9.9	99.5
63	45	296	240	261	259	268	265	1483	81	81	81	385	0.000	9.21	0.45	10.0	0.048	10.9	10.34	3	10.0	10.5	99.5
68	50	300	238	259	272	264	267	1524	81	81	81	400	0.000	8.93	0.46	8.3	0.056	12.6	12.63	4	8.8	8.8	99.5
73	55	305	238	257	279	262	268	1615	81	81	81	407	0.000	8.66	0.46	7.6	0.072	13.3	12.46	5	8.4	8.9	99.3
78	60	316	238	257	288	260	272	1676	81	81	81	429	0.000	8.39	0.50	6.5	0.312	14.3	14.22	24	7.7	7.6	96.5
83	65	325	240	257	303	257	277	1683	81	81	81	435	0.000	8.07	0.55	6.5	0.880	14.0	14.14	73	7.6	7.7	90.3
88	70	331	245	260	307	258	280	1685	82	82	82	444	0.000	7.76	0.54	6.4	0.807	14.2	14.16	66	7.5	7.5	91.2
93	75	353	245	264	314	255	286	1633	84	82	82	423	0.000	7.48	0.55	7.5	0.416	13.3	13.46	35	8.2	8.0	95.1
98	80	377	251	271	310	258	293	1633	84	82	82	421	0.000	7.26	0.50	7.5	0.372	13.2	13.17	32	8.2	8.2	95.5
103	85	390	258	275	310	260	299	1581	84	82	82	412	0.000	7.03	0.45	8.3	0.163	12.6	12.61	14	8.8	8.5	98.0
108	90	408	262	280	308	260	304	1559	82	82	82	408	0.000	6.80	0.41	8.4	0.151	12.4	12.43	13	8.8	8.8	98.2
113	95	408	269	284	308	258	305	1583	84	82	82	412	0.000	6.58	0.40	7.5	0.081	13.4	12.88	6	8.3	8.6	99.2
118	100	406	280	286	293	260	305	1478	82	82	84	397	0.000	6.30	0.46	9.2	0.055	11.7	11.64	4	9.4	9.5	99.5

Rec #	Tst .ET	Top Tmp F	Rht Avg F	Lft Tmp F	Bak Tmp F	Bot Tmp F	Avg Stove F	Ext1 F	Ext2 F	Ext3 F	Ext4 F	Stk Tmp F	Stk Drft "H2O	Scale kg	10min Drop kg	Stk .O2 %	Stk CO %	Stk CO2 %	Inc CO2 %	CO Fac g/kg	Stk AF	Inc AF	Comb Effic %
123	105	419	291	291	297	260	312	1433	84	82	82	389	0.000	6.08	0.45	9.3	0.055	11.6	11.58	4	9.5	9.5	99.5
128	110	415	302	293	287	263	312	1502	85	82	82	391	0.000	5.90	0.40	9.0	0.053	11.9	12.02	3	9.2	9.2	99.5
133	115	406	308	291	285	263	311	1577	85	83	83	402	0.000	5.67	0.41	7.5	0.197	13.3	13.18	16	8.3	8.4	97.7
138	120	419	322	293	289	263	317	1588	83	83	83	411	0.000	5.44	0.46	6.8	0.970	13.6	13.54	83	7.7	7.7	89.2
143	125	450	335	298	291	263	327	1566	83	83	83	413	0.000	5.22	0.45	6.7	0.997	13.7	13.66	84	7.6	7.6	89.0
148	130	478	352	304	293	263	338	1541	85	83	83	411	0.000	4.94	0.46	6.7	0.845	13.9	13.70	71	7.7	7.7	90.6
153	135	517	365	311	291	265	350	1513	85	83	83	404	0.000	4.76	0.41	7.2	0.221	13.7	13.51	18	8.1	8.2	97.5
158	140	519	372	318	296	265	354	1477	85	85	85	396	0.000	4.54	0.36	8.0	0.080	12.9	12.70	5	8.6	8.7	99.2
163	145	523	378	322	281	266	354	1438	85	85	85	389	0.000	4.35	0.37	8.2	0.081	12.7	12.64	6	8.7	8.8	99.2
168	150	508	381	324	281	266	352	1434	85	85	85	389	0.000	4.17	0.32	8.4	0.083	12.5	12.46	6	8.8	8.9	99.1
173	155	493	383	324	279	266	349	1462	85	85	85	385	0.000	3.99	0.32	8.4	0.074	12.5	12.42	5	8.9	8.9	99.2
178	160	489	383	326	279	268	349	1445	85	85	85	383	0.000	3.81	0.32	8.7	0.063	12.2	12.12	4	9.0	9.1	99.4
183	165	496	387	329	277	266	351	1417	85	85	83	374	0.000	3.63	0.32	9.3	0.056	11.6	11.57	4	9.5	9.5	99.5
188	170	504	390	331	274	266	353	1388	85	83	83	370	0.000	3.49	0.27	9.6	0.060	11.3	11.31	4	9.7	9.7	99.4
193	175	517	392	338	262	266	355	1333	86	83	86	359	0.000	3.36	0.27	10.3	0.075	10.6	10.64	6	10.3	10.2	99.1
198	180	502	390	338	251	266	349	1275	86	83	83	351	0.000	3.22	0.23	10.8	0.077	10.1	9.93	7	10.7	10.9	99.0
203	185	487	385	338	240	264	343	1240	86	86	86	344	0.000	3.13	0.18	11.1	0.071	9.8	9.86	6	11.0	10.9	99.1
208	190	479	381	336	240	266	340	1252	86	86	84	340	0.000	3.04	0.18	11.3	0.097	9.6	9.58	10	11.2	11.2	98.6
213	195	481	377	336	238	264	339	1190	86	84	84	333	0.000	2.90	0.18	11.7	0.098	9.2	9.46	10	11.5	11.3	98.5
218	200	496	373	338	234	264	341	1143	86	86	84	327	0.000	2.81	0.18	12.0	0.147	8.9	8.80	17	11.8	12.0	97.6
223	205	500	370	342	232	262	341	1091	86	84	84	323	0.000	2.72	0.14	11.8	0.557	8.8	8.99	73	11.4	11.4	90.4
228	210	503	364	347	230	262	341	1019	86	84	84	312	0.000	2.63	0.14	12.4	0.708	8.2	8.07	100	12.0	12.2	87.3
233	215	488	360	349	223	262	336	1005	84	84	84	303	0.000	2.49	0.19	12.8	0.514	7.9	7.84	75	12.6	12.7	90.2
238	220	470	353	351	212	260	329	960	84	84	82	295	0.000	2.45	0.14	13.0	0.494	7.6	7.55	74	13.0	13.2	90.3
243	225	457	347	349	199	258	322	922	84	84	84	286	0.000	2.40	0.09	13.7	0.339	7.0	7.06	54	14.1	14.1	92.6
248	230	449	345	347	191	258	318	890	84	84	84	277	0.000	2.36	0.04	13.9	0.330	6.9	6.81	54	14.4	14.5	92.7
253	235	442	340	345	191	256	315	861	84	84	84	271	0.000	2.31	0.09	14.2	0.408	6.5	6.53	71	14.9	14.9	90.6
258	240	436	334	343	187	254	310	842	84	84	82	267	0.000	2.27	0.09	14.3	0.437	6.4	6.43	77	15.0	15.0	89.8
263	245	429	332	338	187	256	308	811	84	82	84	260	0.000	2.27	0.04	14.5	0.545	6.1	6.14	102	15.4	15.4	87.1
268	250	425	325	336	178	254	304	781	84	82	84	256	0.000	2.22	0.05	14.7	0.570	6.0	5.95	110	15.6	15.7	86.2
273	255	418	323	334	172	254	300	754	84	82	84	249	0.000	2.18	0.04	14.9	0.567	5.8	5.80	112	16.0	16.0	86.0
278	260	412	319	330	170	252	296	735	84	82	82	243	0.000	2.13	0.09	15.0	0.572	5.7	5.65	116	16.2	16.3	85.6
283	265	406	314	325	165	252	292	714	84	82	82	239	0.000	2.13	0.05	15.1	0.593	5.5	5.52	124	16.5	16.6	84.8
288	270	401	312	323	163	249	290	693	84	82	82	234	0.000	2.09	0.04	15.1	0.593	5.5	5.45	124	16.6	16.7	84.8
293	275	397	306	321	155	245	285	679	82	82	82	230	0.000	2.04	0.09	15.3	0.590	5.4	5.42	126	16.8	16.8	84.5
298	280	393	304	319	163	245	285	662	82	82	82	226	0.000	2.04	0.05	15.3	0.584	5.3	5.33	126	17.0	17.0	84.6
303	285	388	302	315	159	243	281	645	82	80	82	222	0.000	2.00	0.04	15.5	0.574	5.2	5.20	128	17.4	17.3	84.4
308	290	384	297	310	151	241	277	655	82	82	80	219	0.000	1.95	0.05	15.3	0.643	5.3	5.29	139	16.8	17.0	83.3
313	295	380	295	308	151	239	274	640	82	82	82	217	0.000	1.90	0.10	15.5	0.617	5.1	5.15	138	17.3	17.3	83.3
318	300	375	291	306	140	237	270	630	82	80	80	215	0.000	1.90	0.05	15.6	0.608	5.1	5.03	138	17.6	17.7	83.4
323	305	373	286	304	148	235	269	619	80	80	80	211	0.000	1.81	0.09	15.7	0.609	4.9	5.00	142	17.8	17.7	83.0
328	310	369	284	301	140	232	265	604	80	80	80	208	0.000	1.81	0.09	15.7	0.595	4.9	4.86	139	17.9	18.1	83.3
333	315	367	282	297	153	230	266	591	80	80	80	206	0.000	1.81	0.00	15.9	0.571	4.8	4.77	138	18.4	18.4	83.3
338	320	362	277	295	144	228	261	580	80	80	80	202	0.000	1.77	0.04	16.0	0.559	4.7	4.66	137	18.6	18.8	83.5
343	325	358	275	293	139	225	258	570	80	80	80	200	0.000	1.77	0.00	16.0	0.546	4.6	4.60	135	18.9	19.0	83.7
348	330	355	273	288	133	221	254	559	80	78	80	197	0.000	1.72	0.05	16.1	0.559	4.6	4.56	141	19.0	19.1	83.1
353	335	353	271	286	139	221	254	550	80	78	80	195	0.000	1.68	0.04	16.2	0.542	4.5	4.54	138	19.3	19.2	83.4

Rec #	Tst .ET	Top Tmp F	Rht Avg F	Lft Tmp F	Bak Tmp F	Bot Tmp F	Avg Stove F	Ext1 F	Ext2 F	Ext3 F	Ext4 F	Stk Tmp F	Stk Drft "H2O	Scale kg	10min Drop kg	Stk .O2 %	Stk CO %	Stk CO2 %	Inc CO2 %	CO Fac g/kg	Stk AF	Inc AF	Comb Effic %
358	340	349	266	290	129	219	251	539	80	80	77	193	0.000	1.68	0.00	16.2	0.536	4.5	4.42	137	19.4	19.6	83.4
363	345	346	264	281	141	219	250	535	79	79	79	191	0.000	1.63	0.05	16.2	0.536	4.4	4.40	139	19.5	19.7	83.3
368	350	342	260	279	128	216	245	541	79	79	77	191	0.000	1.63	0.05	16.1	0.560	4.6	4.69	141	19.0	18.7	83.1
373	355	344	257	279	137	212	246	541	79	77	77	190	0.000	1.59	0.04	15.8	0.657	4.8	4.79	159	18.2	18.1	81.4
378	360	344	255	277	130	210	243	539	77	77	77	190	0.000	1.59	0.04	15.9	0.620	4.8	4.72	151	18.3	18.5	82.2
383	365	344	253	275	130	212	243	537	79	77	77	190	0.000	1.54	0.05	16.0	0.585	4.7	4.66	144	18.6	18.7	82.8
388	370	342	251	275	135	208	242	530	77	77	77	190	0.000	1.50	0.09	16.2	0.566	4.5	4.49	146	19.2	19.3	82.6
393	375	340	251	270	137	207	241	524	79	77	77	188	0.000	1.50	0.04	16.3	0.544	4.4	4.39	143	19.7	19.6	82.8
398	380	340	249	270	137	207	240	524	77	77	77	188	0.000	1.45	0.05	16.3	0.541	4.4	4.40	142	19.5	19.6	83.0
403	385	337	246	268	126	205	237	522	77	77	77	186	0.000	1.41	0.09	16.4	0.520	4.3	4.30	139	20.0	20.0	83.3

Rec #	Tst .ET	Top Tmp F	Rht Avg F	Lft Tmp F	Bak Tmp F	Bot Tmp F	Avg Stove F	Ext1 F	Ext2 F	Ext3 F	Ext4 F	Stk Tmp F	Stk Drft "H2O	Scale kg	10min Drop kg	Stk .O2 %	Stk CO %	Stk CO2 %	Inc CO2 %	CO Fac g/kg	Stk AF	Inc AF	Comb Effic %

* Real time data is presented at 5 minute intervals. Average values appearing in this report are based on more frequent measurements

Notes:

Results Table = HHT
Filename = DauntCatCord1909192
Test Stand A
ASTM beech, Low

Stove Name: DauntCatCord Test Date: 9/20/2019 Run #: 1 File: DauntCatCord19 Record # Start 7 Stop 138

Test Time	131	min
Wet Wood	7.82	kg
Moisture	20.5	dry %
Dry Wood	6.49	kg
Coal Bed	1.18	kg
Stove DeltaT	327	deg F
Tunnel CD	0.933	

Avg Stack Gasses (amb Corrected)

CO	0.416	%
CO2	12.61	%
O2	7.97	%
HC	n/m	% as CH4
TCC	0.83	% as CO2

Results

Real Time Data*

Rec #	Tst .ET	Top Tmp F	Rht Avg F	Lft Tmp F	Bak Tmp F	Bot Tmp F	Avg Stove F	Ext1 F	Ext2 F	Ext3 F	Ext4 F	Stk Tmp F	Stk Drft "H2O	Scale kg	10min Drop kg	Stk .O2 %	Stk CO %	Stk CO2 %	Inc CO2 %	CO Fac g/kg	Stk AF	Inc AF	Comb Effic %
0	0	0	0	0	0	0	0	0	0	0	0	0	0.000	0.00	0.00	0.0	0.000	0.0	0.00	0	0.0	0.0	0.0
5	5	73	71	73	76	76	74	73	71	71	73	73	0.000	1.50	-1.50	20.9	0.011	0.0	0.07	0	90.8	88.2	100.0
7	0	76	71	74	69	74	73	74	74	74	71	74	0.000	1.50	-1.50	20.9	0.012	0.0	0.07	0	90.0	88.2	0.0
12	5	144	76	80	74	76	90	76	74	74	74	269	0.000	1.32	14.28	17.6	0.133	3.3	3.75	43	25.8	23.7	94.1
17	10	284	93	112	87	74	130	85	74	74	72	542	0.000	0.95	0.50	11.3	0.294	9.5	7.57	35	11.0	13.5	95.1
22	15	450	134	174	117	76	190	115	74	74	74	566	0.000	0.50	0.82	8.0	0.667	12.6	12.43	61	8.4	8.6	91.7
27	20	417	151	192	121	89	194	1150	74	76	74	343	0.000	2.45	-1.59	13.4	0.342	7.4	3.99	52	13.5	21.6	92.9
32	25	354	155	192	160	104	193	1404	76	76	74	422	0.000	2.13	-1.68	8.2	0.140	12.6	12.84	11	8.7	8.6	98.3
37	30	324	162	196	190	123	199	1440	77	77	75	435	0.000	1.77	0.63	9.3	0.351	11.5	11.89	35	9.3	9.2	95.1
42	35	329	169	203	214	145	212	1287	77	77	77	452	0.000	1.45	0.59	7.7	0.068	13.2	12.36	4	8.4	8.9	99.4
47	40	337	184	212	223	164	224	1321	77	77	77	453	0.000	1.18	0.54	10.2	0.373	10.6	10.38	40	10.0	10.1	94.4
52	45	323	197	216	225	186	229	1529	77	77	77	487	0.000	8.62	-7.21	6.1	1.241	14.3	14.22	102	7.3	7.4	87.1
57	50	318	204	227	247	201	239	1572	79	77	77	492	0.000	8.30	0.68	7.2	0.102	13.6	13.04	7	8.2	8.5	98.9
62	55	323	206	240	262	217	250	1659	80	77	77	522	0.000	7.85	0.68	5.8	0.249	15.0	15.09	18	7.4	7.0	97.4
67	60	323	206	251	286	234	260	1666	80	80	80	527	0.000	7.44	0.77	5.4	0.493	15.3	15.03	37	7.2	7.2	94.8
72	65	334	210	262	286	249	268	1672	80	80	80	533	0.000	6.94	0.82	4.8	2.016	15.1	15.20	157	6.7	6.7	81.6
77	70	354	217	269	304	267	282	1712	82	80	80	542	0.000	6.53	0.77	4.7	1.663	15.4	15.41	127	6.7	6.8	84.5
82	75	363	226	276	308	280	291	1717	82	80	80	546	0.000	6.12	0.77	4.9	0.685	15.7	15.63	51	6.9	6.9	93.1
87	80	376	233	285	315	295	301	1724	82	80	80	536	0.000	5.62	0.82	5.3	0.503	15.4	15.61	37	7.1	6.7	94.8
92	85	395	241	296	313	304	310	1649	83	81	81	527	0.000	5.22	0.77	5.3	0.448	15.4	14.79	33	7.2	7.6	95.4
97	90	428	255	315	315	313	325	1577	83	83	83	510	0.000	4.81	0.77	7.3	0.054	13.6	14.09	3	8.2	8.0	99.6
102	95	482	270	348	296	320	343	1449	83	81	83	502	0.000	4.40	0.72	7.5	0.323	13.3	12.79	27	8.2	8.5	96.1
107	100	545	287	374	289	320	363	1260	83	83	83	500	0.000	3.99	0.73	7.3	2.016	12.7	14.82	188	7.7	6.8	78.8
112	105	547	311	387	292	322	372	1593	83	83	83	509	0.000	3.58	0.82	6.5	0.091	14.4	14.77	6	7.8	7.5	99.1
117	110	545	329	392	279	318	372	1610	83	83	83	509	0.000	3.22	0.68	6.2	0.112	14.7	13.85	8	7.6	8.1	98.9

Rec #	Tst .ET	Top Tmp F	Rht Avg F	Lft Tmp F	Bak Tmp F	Bot Tmp F	Avg Stove F	Ext1 F	Ext2 F	Ext3 F	Ext4 F	Stk Tmp F	Stk Drft "H2O	Scale kg	10min Drop kg	Stk .O2 %	Stk CO %	Stk CO2 %	Inc CO2 %	CO Fac g/kg	Stk AF	Inc AF	Comb Effic %
122	115	578	351	394	279	316	383	1632	84	84	84	524	0.000	2.86	0.68	5.9	0.136	15.0	15.47	9	7.5	7.2	98.6
127	120	612	368	407	286	312	397	1574	86	84	84	522	0.000	2.54	0.63	5.7	0.203	15.1	15.14	14	7.4	7.3	97.9
132	125	619	375	427	284	310	403	1561	84	84	84	509	0.000	2.22	0.59	6.9	0.063	14.0	14.23	4	8.0	7.9	99.5
137	130	604	379	440	273	308	401	1380	86	84	84	479	0.000	2.00	0.45	10.4	0.057	10.5	11.01	4	10.3	10.0	99.4
138	131	602	377	440	266	308	399	1361	86	84	84	473	0.000	1.95	0.45	10.4	0.057	10.5	10.27	4	10.3	10.6	99.4

Rec #	Tst .ET	Top Tmp F	Rht Avg F	Lft Tmp F	Bak Tmp F	Bot Tmp F	Avg Stove F	Ext1 F	Ext2 F	Ext3 F	Ext4 F	Stk Tmp F	Stk Drft "H2O	Scale kg	10min Drop kg	Stk .O2 %	Stk CO %	Stk CO2 %	Inc CO2 %	CO Fac g/kg	Stk AF	Inc AF	Comb Effic %

* Real time data is presented at 5 minute intervals. Average values appearing in this report are based on more frequent measurements

Notes:

Results Table = HHT
Filename = DauntCatCord1909201
Test Stand A
ASTM beech, Hi

Stove Name: DauntCatCord Test Date: 9/20/2019 Run #: 2 File: DauntCatCord19 Record # Start 47 Stop 700

Test Time	653	min
Wet Wood	10.09	kg
Moisture	20.5	dry %
Dry Wood	8.37	kg
Coal Bed	1.27	kg
Stove DeltaT	-147	deg F
Tunnel CD	0.933	

Avg Stack Gasses (amb Corrected)

CO	0.237	%
CO2	2.57	%
O2	18.19	%
HC	n/m	% as CH4
TCC	0.48	% as CO2

Results

Real Time Data*

Rec #	Tst .ET	Top Tmp F	Rht Avg F	Lft Tmp F	Bak Tmp F	Bot Tmp F	Avg Stove F	Ext1 F	Ext2 F	Ext3 F	Ext4 F	Stk Tmp F	Stk Drft "H2O	Scale kg	10min Drop kg	Stk .O2 %	Stk CO %	Stk CO2 %	Inc CO2 %	CO Fac g/kg	Stk AF	Inc AF	Comb Effic %
0	0	0	0	0	0	0	0	0	0	0	0	0	0.000	0.00	0.00	0.0	0.000	0.0	0.00	0	0.0	0.0	0.0
5	5	508	360	412	230	310	364	1288	84	84	84	332	0.000	1.63	0.50	15.7	0.238	5.2	6.69	51	18.4	14.5	93.1
10	10	491	358	397	226	310	357	1211	85	85	85	323	0.000	1.54	0.18	11.2	0.088	9.7	8.93	8	11.1	11.9	98.8
15	15	478	356	387	213	306	348	1139	85	85	85	308	0.000	1.45	0.14	13.3	0.114	7.6	7.93	15	13.6	13.1	97.9
20	20	471	348	378	215	300	342	1072	85	83	85	298	0.000	1.45	0.05	13.6	0.159	7.2	6.98	23	14.1	14.5	96.7
25	25	461	343	370	207	296	335	1010	85	83	85	289	0.000	1.41	0.04	14.2	0.250	6.6	6.70	42	15.1	14.9	94.2
30	30	452	339	361	198	289	328	967	85	83	83	281	0.000	1.36	0.05	14.6	0.334	6.1	6.13	61	15.8	15.8	91.7
35	35	441	335	355	188	283	320	889	85	83	83	270	0.000	1.36	0.05	15.4	0.503	5.3	5.45	110	17.3	17.0	86.3
40	40	429	329	344	173	279	311	822	83	83	83	259	0.000	1.32	0.04	15.8	0.579	4.9	4.82	137	18.1	18.3	83.5
45	45	418	322	335	173	272	304	775	83	83	83	251	0.000	1.32	0.00	16.0	0.576	4.6	4.68	144	18.9	18.7	82.8
47	0	407	320	331	171	268	299	843	83	83	83	251	0.000	1.27	0.05	16.6	0.609	4.1	4.58	174	20.5	19.0	80.1
52	5	349	309	318	158	266	280	1101	84	84	84	279	0.000	11.25	-9.93	13.2	0.640	7.4	7.79	100	13.1	12.7	87.3
57	10	307	294	301	165	260	265	1178	84	84	84	301	0.000	11.07	0.31	12.2	0.547	8.4	8.27	74	11.9	12.0	90.2
62	15	282	275	284	174	253	254	1228	84	84	84	316	0.000	10.88	0.32	11.9	0.292	8.8	8.84	36	11.7	11.8	94.9
67	20	264	262	271	189	251	247	1248	84	84	84	329	0.000	10.70	0.32	11.7	0.234	9.1	8.96	28	11.6	11.8	96.0
72	25	251	249	258	191	247	239	1309	84	82	84	342	0.000	10.48	0.36	10.9	0.174	9.9	10.06	18	10.8	10.7	97.4
77	30	245	241	252	198	243	236	1338	84	84	84	351	0.000	10.25	0.36	10.6	0.238	10.2	10.07	25	10.4	10.6	96.5
82	35	245	232	247	202	236	233	1211	84	84	84	351	0.000	10.02	0.41	10.3	0.502	10.4	9.45	55	10.1	10.8	92.5
87	40	252	226	252	187	237	231	1153	84	84	84	338	0.000	9.80	0.40	12.1	0.824	8.4	8.30	113	11.6	11.7	85.9
92	45	254	222	258	207	235	235	1158	85	82	82	339	0.000	9.52	0.41	11.9	0.763	8.7	8.75	101	11.4	11.4	87.1
97	50	258	217	267	202	235	236	1191	85	85	85	343	0.000	9.34	0.37	11.3	0.596	9.4	9.17	73	10.9	11.1	90.4
102	55	272	218	269	207	233	240	1164	85	83	85	352	0.000	9.07	0.41	10.5	0.723	10.1	10.22	83	10.1	10.0	89.2
107	60	283	218	285	226	231	248	1235	85	85	85	361	0.000	8.84	0.46	9.7	0.818	10.8	10.78	87	9.5	9.5	88.7
112	65	298	218	300	224	233	255	1295	85	83	85	372	0.000	8.53	0.49	9.3	0.907	11.1	11.59	95	9.2	8.9	87.9
117	70	311	218	313	224	233	260	1123	85	83	85	357	0.000	8.25	0.50	10.8	0.885	9.7	10.05	106	10.3	10.1	86.7

Rec #	Tst .ET	Top Tmp F	Rht Avg F	Lft Tmp F	Bak Tmp F	Bot Tmp F	Avg Stove F	Ext1 F	Ext2 F	Ext3 F	Ext4 F	Stk Tmp F	Stk Drft "H2O	Scale kg	10min Drop kg	Stk .O2 %	Stk CO %	Stk CO2 %	Inc CO2 %	CO Fac g/kg	Stk AF	Inc AF	Comb Effic %
122	75	326	220	328	231	233	268	1043	85	85	85	341	0.000	8.03	0.45	11.2	0.987	9.2	9.02	124	10.6	10.8	84.7
127	80	339	222	342	220	233	271	971	85	85	85	331	0.000	7.80	0.41	12.0	1.005	8.4	8.55	139	11.4	11.3	83.2
132	85	350	225	355	203	233	273	949	85	85	85	320	0.000	7.57	0.41	12.1	1.014	8.3	8.30	143	11.6	11.6	82.9
137	90	353	225	359	210	231	275	980	85	85	85	320	0.000	7.39	0.37	11.8	0.994	8.7	8.54	134	11.2	11.3	83.8
142	95	357	227	363	207	233	278	938	85	85	85	313	0.000	7.17	0.36	12.0	1.039	8.5	8.45	143	11.3	11.4	82.9
147	100	361	229	370	197	233	278	924	86	83	86	309	0.000	6.98	0.37	11.9	1.001	8.5	8.58	136	11.3	11.2	83.5
152	105	368	231	377	188	233	279	903	86	83	86	305	0.000	6.80	0.37	11.6	1.126	8.8	8.60	150	11.0	11.1	82.2
157	110	377	234	385	195	234	285	868	86	86	86	298	0.000	6.58	0.40	11.9	1.105	8.5	8.51	151	11.2	11.2	82.1
162	115	381	236	394	188	231	286	808	86	86	86	288	0.000	6.39	0.37	12.2	1.159	8.2	7.84	166	11.6	11.9	80.7
167	120	390	238	399	182	234	288	748	86	86	84	277	0.000	6.21	0.37	13.1	1.199	7.3	7.34	192	12.5	12.5	78.5
172	125	396	238	405	176	232	289	686	86	86	84	266	0.000	6.03	0.32	13.3	1.110	7.0	6.89	184	13.0	13.2	79.2
177	130	401	238	410	180	232	292	748	86	84	86	260	0.000	5.85	0.32	13.3	1.115	7.1	6.98	184	12.9	13.0	79.1
182	135	377	238	401	169	232	283	1069	86	84	86	301	0.000	5.67	0.32	11.7	0.655	8.9	9.13	84	11.3	11.1	89.1
187	140	377	236	390	180	232	283	964	86	84	86	308	0.000	5.49	0.36	11.7	0.922	8.8	9.69	122	11.1	10.6	85.0
192	145	392	236	388	193	232	288	890	86	84	84	290	0.000	5.31	0.31	12.6	0.875	7.9	7.70	129	12.2	12.4	84.3
197	150	403	236	392	184	230	289	758	86	86	84	273	0.000	5.22	0.27	13.7	1.000	6.7	6.87	173	13.5	13.4	80.1
202	155	403	240	390	187	228	290	714	86	84	84	258	0.000	5.03	0.28	14.0	0.973	6.4	6.34	175	14.1	14.3	79.9
207	160	395	240	386	165	228	283	783	84	84	84	260	0.000	4.90	0.27	13.9	0.925	6.6	5.99	163	13.9	14.8	81.0
212	165	392	243	375	165	228	281	668	86	84	84	251	0.000	4.76	0.27	14.1	1.082	6.3	5.90	201	14.2	14.8	77.7
217	170	382	241	366	163	228	276	621	84	84	84	241	0.000	4.63	0.27	15.1	1.073	5.3	5.38	235	15.9	15.8	75.0
222	175	369	241	360	165	228	272	595	84	84	84	230	0.000	4.49	0.23	15.2	1.037	5.2	5.22	232	16.2	16.2	75.2
227	180	360	238	351	157	228	267	576	84	84	84	223	0.000	4.40	0.18	15.2	1.069	5.2	5.16	240	16.2	16.3	74.6
232	185	360	238	347	150	226	264	563	84	84	84	219	0.000	4.26	0.23	15.1	1.083	5.3	5.32	236	15.8	15.9	74.9
237	190	364	239	340	155	223	264	553	84	84	84	215	0.000	4.13	0.22	15.1	0.595	5.5	5.50	122	16.5	15.5	84.9
242	195	366	238	336	150	223	263	542	84	82	82	208	0.000	3.99	0.27	16.8	0.081	4.1	5.51	14	22.5	15.5	97.9
247	200	369	241	330	140	223	260	537	84	84	84	206	0.000	3.90	0.23	20.7	0.026	0.3	5.47	-30	78.7	15.8	95.8
252	205	364	241	325	142	221	259	529	84	82	84	202	0.000	3.81	0.18	20.8	0.026	0.1	4.31	0	88.4	21.8	0.0
257	210	358	241	319	135	221	255	531	84	84	82	202	0.000	3.67	0.18	20.9	0.025	0.1	1.15	0	89.8	50.3	0.0
262	215	358	240	314	135	219	253	533	82	80	82	199	0.000	3.54	0.22	20.9	0.026	0.1	0.13	0	89.7	86.3	0.0
267	220	362	245	312	144	217	256	542	84	82	82	197	0.000	3.45	0.18	20.9	0.025	0.1	0.12	0	90.5	87.5	0.0
272	225	364	245	310	133	217	254	583	84	82	82	200	0.000	3.31	0.23	20.9	0.025	0.0	0.08	0	90.5	89.5	0.0
277	230	364	245	305	135	217	253	557	82	82	82	199	0.000	3.27	0.13	20.9	0.026	0.0	0.07	0	90.5	90.1	0.0
282	235	377	245	305	139	217	257	555	82	82	82	202	0.000	3.17	0.14	20.9	0.022	0.0	0.07	0	90.7	90.1	0.0
287	240	384	245	305	139	215	258	561	82	82	82	202	0.000	3.08	0.14	20.9	0.025	0.0	0.07	0	90.5	90.8	0.0
292	245	381	247	303	137	215	257	561	82	84	82	199	0.000	2.99	0.18	20.9	0.023	0.0	0.06	0	90.7	90.8	0.0
297	250	377	249	301	131	214	254	561	82	82	82	199	0.000	2.90	0.18	20.9	0.023	0.0	0.05	0	90.7	91.5	0.0
302	255	368	251	299	135	212	253	556	82	82	82	197	0.000	2.86	0.13	20.9	0.024	0.0	0.04	0	90.6	92.2	0.0
307	260	364	251	294	141	214	253	552	82	82	82	195	0.000	2.86	0.04	20.9	0.024	0.0	0.04	0	89.9	91.5	0.0
312	265	362	253	290	137	214	251	550	82	79	79	195	0.000	2.77	0.09	20.9	0.022	0.0	0.03	0	90.7	92.2	0.0
317	270	359	253	288	128	214	249	559	82	82	82	195	0.000	2.72	0.09	20.9	0.023	0.0	0.04	0	90.7	92.2	0.0
322	275	357	257	283	133	214	249	563	81	81	79	193	0.000	2.68	0.09	20.9	0.023	0.0	0.03	0	90.7	92.2	0.0
327	280	355	259	281	124	214	247	567	81	79	79	193	0.000	2.68	0.04	20.9	0.022	0.0	0.04	0	90.7	92.2	0.0
332	285	351	264	279	128	212	247	563	79	79	79	192	0.000	2.63	0.05	20.9	0.022	0.0	0.04	0	90.7	92.2	0.0
337	290	350	268	274	124	214	246	563	81	79	79	192	0.000	2.59	0.09	20.9	0.022	0.0	0.05	0	90.7	91.4	0.0
342	295	348	272	272	134	214	248	562	81	79	79	190	0.000	2.59	0.04	20.9	0.023	0.0	0.07	0	90.7	90.1	100.0
347	300	346	277	270	128	214	247	560	81	79	79	190	0.000	2.54	0.05	20.9	0.023	0.0	0.08	0	90.7	89.5	0.0
352	305	344	278	268	130	214	247	569	81	79	79	190	0.000	2.49	0.10	20.9	0.023	0.0	0.10	0	90.7	88.2	0.0

Rec #	Tst .ET	Top Tmp F	Rht Avg F	Lft Tmp F	Bak Tmp F	Bot Tmp F	Avg Stove F	Ext1 F	Ext2 F	Ext3 F	Ext4 F	Stk Tmp F	Stk Drft "H2O	Scale kg	10min Drop kg	Stk .O2 %	Stk CO %	Stk CO2 %	Inc CO2 %	CO Fac g/kg	Stk AF	Inc AF	Comb Effic %
357	310	344	281	265	138	214	248	569	81	79	79	192	0.000	2.49	0.05	20.9	0.023	0.0	0.15	0	90.7	84.5	100.0
362	315	344	281	263	132	214	247	571	81	79	79	192	0.000	2.45	0.04	20.9	0.021	0.0	0.41	0	90.8	72.0	0.0
367	320	341	283	263	136	213	247	571	79	79	79	192	0.000	2.40	0.05	20.9	0.022	0.0	0.82	0	90.7	58.2	0.0
372	325	343	285	261	127	213	246	568	78	78	78	190	0.000	2.36	0.09	20.9	0.022	0.1	1.24	0	90.7	48.5	0.0
377	330	341	282	261	129	213	245	568	78	78	78	189	0.000	2.36	0.04	20.9	0.019	0.1	1.82	0	90.2	39.4	0.0
382	335	338	284	260	133	213	246	561	78	78	78	189	0.000	2.31	0.09	20.9	0.022	0.1	2.35	0	90.0	33.5	0.0
387	340	341	284	256	133	213	245	557	78	78	78	187	0.000	2.31	0.05	20.9	0.022	0.1	2.72	0	90.7	30.5	0.0
392	345	338	284	256	131	213	244	555	78	78	78	187	0.000	2.27	0.04	20.9	0.021	0.1	3.44	0	89.4	25.8	0.0
397	350	336	284	256	131	210	243	552	78	78	78	184	0.000	2.22	0.09	20.9	0.020	0.1	3.59	0	90.1	25.0	0.0
402	355	332	282	253	133	212	242	548	78	78	78	184	0.000	2.22	0.05	20.9	0.020	0.1	3.97	0	89.5	23.2	0.0
407	360	331	281	251	131	210	241	546	77	77	77	182	0.000	2.18	0.04	20.9	0.020	0.1	4.14	0	90.1	22.3	0.0
412	365	329	279	255	135	208	241	541	77	77	77	182	0.000	2.18	0.04	20.9	0.020	0.1	4.25	0	89.5	21.8	0.0
417	370	329	279	246	130	208	238	535	77	75	77	182	0.000	2.13	0.05	20.9	0.020	0.1	4.23	0	88.8	21.9	0.0
422	375	324	279	246	128	207	237	526	77	77	75	182	0.000	2.09	0.09	20.9	0.019	0.1	4.26	0	88.9	21.5	0.0
427	380	322	276	244	128	205	235	543	77	77	77	181	0.000	2.09	0.04	20.9	0.019	0.1	4.22	0	88.9	21.7	0.0
432	385	324	276	242	128	203	234	536	77	77	74	181	0.000	2.09	0.04	20.9	0.019	0.1	4.48	0	89.5	20.5	0.0
437	390	326	274	241	121	205	233	532	76	76	76	181	0.000	2.04	0.05	20.9	0.019	0.1	4.39	0	88.9	20.8	0.0
442	395	324	274	239	127	202	233	527	76	76	76	181	0.000	2.00	0.04	20.9	0.020	0.1	4.35	0	90.8	20.9	0.0
447	400	326	274	239	119	200	231	523	76	76	76	181	0.000	2.00	0.04	20.9	0.020	0.1	4.32	0	89.5	20.9	0.0
452	405	326	271	237	119	200	230	519	76	76	74	179	0.000	1.95	0.05	20.9	0.019	0.1	4.27	0	89.5	21.0	0.0
457	410	325	271	234	129	200	232	508	76	74	76	176	0.000	1.95	0.05	20.9	0.019	0.1	4.18	0	89.5	21.2	0.0
462	415	323	269	234	127	198	230	499	76	74	76	176	0.000	1.95	0.00	20.9	0.020	0.1	4.05	0	89.5	21.5	0.0
467	420	321	266	234	122	197	228	486	75	73	73	174	0.000	1.90	0.05	20.9	0.017	0.1	3.96	0	89.6	21.9	0.0
472	425	320	266	229	116	195	225	479	75	75	73	171	0.000	1.86	0.04	20.9	0.017	0.1	3.86	0	90.3	22.3	0.0
477	430	316	262	227	126	193	225	470	75	73	75	169	0.000	1.86	0.04	20.9	0.018	0.1	3.82	0	88.9	22.4	0.0
482	435	316	262	225	122	193	223	463	75	73	75	169	0.000	1.81	0.05	20.9	0.018	0.1	3.76	0	90.2	22.6	0.0
487	440	314	259	225	124	190	222	457	75	73	75	167	0.000	1.81	0.05	20.9	0.019	0.1	3.77	0	89.5	22.5	0.0
492	445	311	257	223	117	190	220	453	75	75	75	165	0.000	1.81	0.00	20.9	0.016	0.1	3.71	0	89.1	22.7	0.0
497	450	309	255	220	119	190	219	450	75	73	73	164	0.000	1.81	0.05	20.9	0.019	0.1	3.75	0	89.5	22.5	0.0
502	455	309	253	218	111	188	216	444	75	75	75	162	0.000	1.77	0.04	20.9	0.018	0.1	3.75	0	88.9	22.5	0.0
507	460	305	250	218	113	188	215	437	74	74	74	160	0.000	1.77	0.04	20.8	0.018	0.1	3.67	0	87.0	22.9	0.0
512	465	302	248	216	108	188	212	433	74	74	72	160	0.000	1.77	0.04	20.8	0.017	0.1	3.60	0	88.3	23.2	0.0
517	470	300	246	213	117	185	212	428	74	74	74	157	0.000	1.72	0.05	20.8	0.018	0.1	3.56	-15	85.8	23.4	0.0
522	475	298	246	211	121	185	212	417	74	74	72	157	0.000	1.72	0.05	20.8	0.018	0.1	3.39	-59	85.8	24.2	0.0
527	480	293	241	209	117	183	209	419	74	72	72	155	0.000	1.72	0.00	20.8	0.017	0.2	3.35	-45	82.9	24.4	93.8
532	485	289	239	209	119	183	208	417	74	72	74	153	0.000	1.68	0.04	20.8	0.019	0.2	3.35	-10	83.4	24.3	98.6
537	490	287	237	207	110	183	205	410	74	72	74	153	0.000	1.68	0.00	20.7	0.018	0.2	3.30	-15	81.3	24.5	97.9
542	495	282	232	206	118	180	204	408	74	72	72	153	0.000	1.63	0.05	20.7	0.016	0.2	3.23	-23	78.7	24.9	96.8
547	500	278	230	202	103	180	199	406	74	72	74	150	0.000	1.63	0.05	20.7	0.017	0.3	3.18	-21	77.6	25.2	97.1
552	505	275	228	200	114	178	199	399	74	74	71	150	0.000	1.63	0.00	20.6	0.018	0.3	3.14	-8	75.2	25.4	98.8
557	510	273	223	200	116	176	198	395	74	74	74	148	0.000	1.59	0.04	20.6	0.019	0.3	3.11	0	75.2	25.6	100.0
562	515	271	221	197	107	176	194	395	73	71	71	148	0.000	1.59	0.04	20.5	0.018	0.4	3.06	-10	71.2	25.9	98.6
567	520	269	219	195	105	176	193	392	73	71	73	146	0.000	1.59	0.00	20.5	0.018	0.4	3.14	-9	70.0	25.3	98.7
572	525	266	219	193	112	174	193	390	73	73	73	146	0.000	1.54	0.05	20.5	0.017	0.5	3.11	-8	68.9	25.6	98.8
577	530	264	214	193	111	174	191	386	73	71	73	144	0.000	1.54	0.05	20.3	0.015	0.6	3.05	-13	64.2	25.9	98.2
582	535	262	214	191	103	173	189	379	73	73	73	143	0.000	1.54	0.00	20.3	0.016	0.6	3.01	-6	62.9	26.2	99.1
587	540	260	212	188	107	173	188	377	73	73	73	141	0.000	1.50	0.04	20.3	0.016	0.7	2.97	-7	61.6	26.4	98.9

Rec #	Tst .ET	Top Tmp F	Rht Avg F	Lft Tmp F	Bak Tmp F	Bot Tmp F	Avg Stove F	Ext1 F	Ext2 F	Ext3 F	Ext4 F	Stk Tmp F	Stk Drft "H2O	Scale kg	10min Drop kg	Stk .O2 %	Stk CO %	Stk CO2 %	Inc CO2 %	CO Fac g/kg	Stk AF	Inc AF	Comb Effic %
592	545	260	210	188	105	173	187	370	73	73	73	139	0.000	1.50	0.04	20.2	0.017	0.7	2.92	-3	59.5	26.7	99.5
597	550	257	210	186	111	171	187	366	73	73	73	139	0.000	1.50	0.04	20.2	0.015	0.7	2.86	-7	59.8	27.2	99.0
602	555	255	205	184	105	173	184	361	73	73	73	137	0.000	1.50	0.00	20.2	0.016	0.8	2.80	-2	58.9	27.5	99.8
607	560	251	205	182	111	171	184	359	73	73	73	137	0.000	1.45	0.05	20.1	0.016	0.8	2.79	-7	56.5	27.6	98.9
612	565	248	203	181	111	169	182	352	72	72	72	134	0.000	1.45	0.05	20.1	0.017	0.9	2.75	-3	55.9	27.8	99.6
617	570	248	201	179	109	171	182	350	72	72	72	134	0.000	1.45	0.00	20.1	0.017	0.9	2.72	-4	55.9	28.0	99.4
622	575	246	199	179	98	169	178	346	72	72	72	132	0.000	1.41	0.04	20.0	0.016	0.9	2.67	-7	55.7	28.4	99.0
627	580	244	199	177	98	166	177	339	72	72	72	132	0.000	1.41	0.00	20.0	0.018	0.9	2.64	-3	54.2	28.6	99.6
632	585	237	196	175	100	166	175	331	72	72	72	130	0.000	1.41	0.00	20.0	0.017	0.9	2.40	-3	55.6	30.4	99.6
637	590	235	194	175	106	166	175	324	72	72	72	130	0.000	1.41	0.04	20.1	0.017	0.9	2.29	-1	56.4	31.2	99.8
642	595	231	190	173	104	166	173	317	72	72	72	128	0.000	1.41	0.00	20.0	0.017	0.9	2.23	-1	55.4	31.7	99.8
647	600	226	190	173	96	164	170	311	72	72	72	125	0.000	1.36	0.05	20.0	0.017	0.9	2.20	-4	55.1	32.0	99.4
652	605	222	188	168	104	164	169	304	72	72	72	123	0.000	1.36	0.00	20.0	0.016	0.9	2.13	-5	55.2	32.6	99.2
657	610	218	185	166	89	162	164	302	72	72	72	123	0.000	1.36	0.00	19.9	0.017	1.0	2.11	0	52.8	32.8	100.0
662	615	215	183	164	102	161	165	295	72	72	72	121	0.000	1.36	0.00	20.0	0.017	1.0	2.11	-1	53.7	32.8	99.8
667	620	213	181	161	102	159	163	293	74	72	72	121	0.000	1.32	0.04	19.9	0.016	1.0	2.09	-5	52.3	33.0	99.3
672	625	211	179	161	87	159	159	287	72	72	72	119	0.000	1.32	0.04	19.9	0.017	1.0	2.03	-3	53.2	33.6	99.6
677	630	209	176	161	87	159	158	291	72	72	72	116	0.000	1.32	0.04	19.9	0.014	1.0	2.00	-5	52.6	33.9	99.3
682	635	204	174	157	99	157	158	291	72	72	72	118	0.000	1.32	0.00	19.9	0.015	1.0	1.95	-5	53.0	34.4	99.3
687	640	200	172	155	101	157	157	291	71	71	71	116	0.000	1.32	0.00	19.9	0.015	1.0	1.97	-1	52.1	34.1	99.8
692	645	198	170	153	89	155	153	286	72	72	72	114	0.000	1.32	0.00	19.8	0.016	1.1	1.94	-2	50.6	34.5	99.7
697	650	193	168	150	88	152	150	280	71	71	71	114	0.000	1.32	0.00	19.9	0.018	1.1	1.91	-1	51.2	34.8	99.8
700	653	193	168	150	95	155	152	280	71	71	71	114	0.000	1.27	0.05	19.8	0.016	1.1	1.91	-2	49.8	34.7	99.7

Rec #	Tst .ET	Top Tmp F	Rht Avg F	Lft Tmp F	Bak Tmp F	Bot Tmp F	Avg Stove F	Ext1 F	Ext2 F	Ext3 F	Ext4 F	Stk Tmp F	Stk Drft "H2O	Scale kg	10min Drop kg	Stk .O2 %	Stk CO %	Stk CO2 %	Inc CO2 %	CO Fac g/kg	Stk AF	Inc AF	Comb Effic %

* Real time data is presented at 5 minute intervals. Average values appearing in this report are based on more frequent measurements

Notes:

Results Table = HHT
Filename = DauntCatCord1909202
Test Stand A
ASTM, beech, Low

Stove Name: DauntCatCord Test Date: 9/21/2019 Run #: 1 File: DauntCatCord19 Record # Start 2 Stop 153

Test Time	151	min
Wet Wood	8.42	kg
Moisture	21	dry %
Dry Wood	6.96	kg
Coal Bed	1.32	kg
Stove DeltaT	328	deg F
Tunnel CD	0.933	

Avg Stack Gasses (amb Corrected)

CO	0.596	%
CO2	12.46	%
O2	8.04	%
HC	n/m	% as CH4
TCC	1.19	% as CO2

Results

Real Time Data*

Rec #	Tst .ET	Top Tmp F	Rht Avg F	Lft Tmp F	Bak Tmp F	Bot Tmp F	Avg Stove F	Ext1 F	Ext2 F	Ext3 F	Ext4 F	Stk Tmp F	Stk Drft "H2O	Scale kg	10min Drop kg	Stk .O2 %	Stk CO %	Stk CO2 %	Inc CO2 %	CO Fac g/kg	Stk AF	Inc AF	Comb Effic %
0	0	0	0	0	0	0	0	0	0	0	0	0	0.000	0.00	0.00	0.0	0.000	0.0	0.00	0	0.0	0.0	0.0
2	0	82	80	80	80	82	81	80	76	76	76	78	0.000	1.54	-1.54	20.9	0.020	0.1	0.05	0	88.2	90.1	0.0
7	5	112	83	83	78	83	88	80	76	76	76	166	0.000	1.54	-1.54	18.7	0.073	2.2	2.38	32	34.2	32.6	95.5
12	10	209	89	98	87	83	113	85	76	76	76	383	0.000	1.32	0.27	15.1	0.161	5.7	6.43	29	17.0	15.5	95.8
17	15	346	108	138	106	81	156	98	77	79	77	584	0.000	0.91	0.59	9.8	0.322	10.9	9.66	33	9.7	10.9	95.4
22	20	431	134	184	121	85	191	126	79	79	79	517	0.000	0.54	0.73	11.2	0.260	9.7	9.10	29	10.9	11.6	95.9
27	25	370	145	192	124	94	185	1241	79	79	79	405	0.000	2.68	-1.86	6.8	2.016	13.1	8.63	181	7.4	11.4	79.4
32	30	335	152	199	162	107	191	1275	79	79	79	457	0.000	2.36	0.59	6.9	0.477	13.8	12.85	39	7.9	8.4	94.5
37	35	331	158	206	197	124	203	1382	79	79	79	457	0.000	2.00	0.59	7.6	0.127	13.3	12.36	9	8.3	8.7	98.6
42	40	353	165	214	219	141	219	1327	80	80	80	466	0.000	1.68	0.59	8.9	0.086	12.0	12.25	7	9.2	9.0	99.0
47	45	377	178	228	230	159	234	1514	82	80	80	477	0.000	1.27	0.68	7.4	0.057	13.5	14.10	3	8.2	7.9	99.5
52	50	336	187	230	239	176	233	1570	82	80	80	477	0.000	9.30	-7.71	5.6	2.016	14.4	14.09	165	6.9	7.1	80.8
57	55	319	189	226	243	193	234	1506	82	82	82	490	0.000	8.80	0.86	5.9	2.016	14.0	14.15	168	7.1	7.0	80.5
62	60	306	196	226	250	209	237	1538	82	82	82	490	0.000	8.30	0.91	6.0	2.016	13.9	14.19	169	7.1	7.0	80.5
67	65	306	211	226	272	224	248	1584	83	83	83	501	0.000	7.80	0.91	5.2	2.016	14.8	14.47	160	6.8	6.9	81.3
72	70	311	228	226	272	235	254	1618	83	83	83	508	0.000	7.39	0.82	4.9	1.895	15.1	15.13	148	6.7	6.8	82.4
77	75	328	252	231	278	250	268	1638	85	83	83	517	0.000	6.94	0.77	4.9	1.246	15.4	15.41	94	6.8	6.9	87.9
82	80	357	283	239	298	265	288	1645	85	83	83	521	0.000	6.53	0.77	4.8	1.091	15.6	15.64	81	6.8	6.8	89.4
87	85	385	311	244	311	279	306	1647	85	83	83	524	0.000	6.12	0.77	4.8	0.929	15.7	15.78	69	6.9	6.8	90.9
92	90	409	335	253	307	294	319	1630	85	85	85	521	0.000	5.67	0.77	4.9	0.573	15.8	15.73	42	7.0	7.0	94.2
97	95	429	357	259	305	303	331	1602	86	86	86	522	0.000	5.31	0.72	5.2	0.399	15.6	15.46	29	7.1	7.2	95.9
102	100	479	377	273	309	316	351	1509	86	86	86	509	0.000	4.90	0.72	6.1	0.099	14.7	14.58	6	7.6	7.7	99.1
107	105	496	397	284	312	320	362	1529	88	86	86	498	0.000	4.58	0.64	6.7	0.077	14.2	14.08	5	7.9	7.9	99.3
112	110	505	407	292	301	327	367	1574	86	86	86	509	0.000	4.22	0.63	5.7	0.124	15.2	15.18	8	7.4	7.4	98.9
117	115	518	421	301	310	334	377	1553	88	86	86	501	0.000	3.90	0.64	6.1	0.076	14.8	14.91	4	7.6	7.5	99.4

Rec #	Tst .ET	Top Tmp F	Rht Avg F	Lft Tmp F	Bak Tmp F	Bot Tmp F	Avg Stove F	Ext1 F	Ext2 F	Ext3 F	Ext4 F	Stk Tmp F	Stk Drft "H2O	Scale kg	10min Drop kg	Stk .O2 %	Stk CO %	Stk CO2 %	Inc CO2 %	CO Fac g/kg	Stk AF	Inc AF	Comb Effic %
122	120	525	438	308	304	340	383	1484	88	86	86	490	0.000	3.63	0.50	6.9	0.098	14.0	13.62	6	8.0	8.2	99.1
127	125	540	449	317	295	343	389	1510	89	86	86	490	0.000	3.31	0.54	6.5	0.084	14.4	14.70	5	7.8	7.6	99.3
132	130	579	462	330	280	345	399	1402	89	86	86	471	0.000	3.04	0.54	8.3	0.232	12.6	12.47	20	8.7	8.8	97.1
137	135	594	473	343	278	345	407	1353	89	87	89	460	0.000	2.81	0.46	9.2	0.226	11.6	11.73	21	9.3	9.3	97.0
142	140	602	480	352	267	345	409	1381	89	87	87	454	0.000	2.54	0.45	9.1	0.194	11.7	11.84	17	9.3	9.2	97.5
147	145	600	478	358	272	343	410	1301	89	87	89	450	0.000	2.36	0.36	10.0	0.186	10.8	10.98	18	10.0	9.9	97.5
152	150	594	476	365	254	343	407	1280	89	89	89	441	0.000	2.18	0.31	10.3	0.137	10.5	10.42	13	10.2	10.4	98.1
153	151	592	476	365	261	341	407	1270	89	87	87	441	0.000	2.13	0.32	10.5	0.134	10.4	10.42	12	10.4	10.4	98.2

Rec #	Tst .ET	Top Tmp F	Rht Avg F	Lft Tmp F	Bak Tmp F	Bot Tmp F	Avg Stove F	Ext1 F	Ext2 F	Ext3 F	Ext4 F	Stk Tmp F	Stk Drft "H2O	Scale kg	10min Drop kg	Stk .O2 %	Stk CO %	Stk CO2 %	Inc CO2 %	CO Fac g/kg	Stk AF	Inc AF	Comb Effic %

* Real time data is presented at 5 minute intervals. Average values appearing in this report are based on more frequent measurements

Notes:

Results Table = HHT
Filename = DauntCatCord1909211
Test Stand A
ASTM Maple, high

Stove Name: DauntCatCord Test Date: 9/21/2019 Run #: 2 File: DauntCatCord19 Record # Start 27 Stop 505

Test Time	478	min
Wet Wood	10.02	kg
Moisture	21	dry %
Dry Wood	8.28	kg
Coal Bed	1.32	kg
Stove DeltaT	-136	deg F
Tunnel CD	0.933	

Avg Stack Gasses (amb Corrected)

CO	0.533	%
CO2	7.62	%
O2	12.95	%
HC	n/m	% as CH4
TCC	1.07	% as CO2

Results

Real Time Data*

Rec #	Tst .ET	Top Tmp F	Rht Avg F	Lft Tmp F	Bak Tmp F	Bot Tmp F	Avg Stove F	Ext1 F	Ext2 F	Ext3 F	Ext4 F	Stk Tmp F	Stk Drft "H2O	Scale kg	10min Drop kg	Stk .O2 %	Stk CO %	Stk CO2 %	Inc CO2 %	CO Fac g/kg	Stk AF	Inc AF	Comb Effic %
0	0	0	0	0	0	0	0	0	0	0	0	0	0.000	0.00	0.00	0.0	0.000	0.0	0.00	0	0.0	0.0	0.0
5	5	489	416	381	205	326	363	1045	88	88	88	305	0.000	1.68	0.59	12.9	0.555	7.8	7.02	82	12.8	13.7	89.3
10	10	461	398	372	203	322	351	1068	88	88	88	311	0.000	1.59	0.18	12.1	0.212	8.8	8.02	26	11.9	12.7	96.4
15	15	450	385	364	212	318	346	1200	88	88	88	314	0.000	1.50	0.18	10.8	0.114	10.1	10.74	11	10.7	10.1	98.5
20	20	463	375	357	206	314	343	1147	88	86	88	301	0.000	1.41	0.18	12.2	0.169	8.7	8.56	20	12.1	12.3	97.1
25	25	459	366	351	195	307	336	1155	88	86	88	299	0.000	1.32	0.13	12.4	0.118	8.5	8.56	13	12.4	12.3	98.1
27	0	457	364	349	197	305	334	1099	88	86	88	294	0.000	4.54	-3.09	13.1	0.121	7.8	8.22	15	13.4	12.8	97.8
32	5	377	349	333	199	301	312	1390	88	86	88	331	0.000	11.11	-9.75	10.3	0.085	10.6	10.61	7	10.2	10.2	99.0
37	10	331	325	314	225	294	298	1443	88	86	86	349	0.000	10.93	0.36	9.6	0.120	11.3	11.10	10	9.6	9.8	98.5
42	15	308	305	297	234	290	287	1482	86	88	86	355	0.000	10.66	0.41	10.1	0.087	10.8	11.10	7	10.1	9.8	99.0
47	20	295	290	284	245	286	280	1555	88	86	86	364	0.000	10.43	0.41	8.9	0.092	12.0	10.68	7	9.1	10.2	99.0
52	25	282	275	271	260	282	274	1546	88	86	86	375	0.000	10.20	0.41	8.7	0.083	12.2	12.08	6	9.0	9.1	99.2
57	30	280	267	262	258	275	268	1590	86	86	86	382	0.000	9.98	0.41	8.4	0.102	12.5	12.19	8	8.8	9.0	98.9
62	35	280	260	254	269	273	267	1618	88	86	88	393	0.000	9.66	0.50	7.9	0.281	12.9	12.97	24	8.5	8.4	96.6
67	40	284	252	249	291	267	268	1618	89	86	86	397	0.000	9.39	0.54	7.6	0.488	13.1	13.07	42	8.2	8.3	94.2
72	45	293	247	247	284	265	267	1598	89	86	86	401	0.000	9.12	0.49	7.8	0.282	13.0	12.97	23	8.4	8.5	96.7
77	50	299	247	245	299	263	271	1607	89	87	89	406	0.000	8.89	0.45	7.4	0.372	13.3	13.16	31	8.2	8.2	95.6
82	55	317	250	247	302	260	275	1564	89	87	87	404	0.000	8.62	0.45	7.9	0.140	13.0	12.71	10	8.5	8.7	98.5
87	60	336	258	247	302	258	280	1478	89	87	89	393	0.000	8.39	0.45	9.5	0.174	11.3	12.05	16	9.6	9.1	97.7
92	65	345	267	250	282	258	280	1470	89	87	87	389	0.000	8.12	0.45	9.0	0.096	11.9	12.22	7	9.2	9.0	99.0
97	70	350	276	250	280	258	283	1504	89	87	89	387	0.000	7.89	0.41	8.6	0.090	12.3	11.98	6	9.0	9.2	99.1
102	75	358	280	252	282	256	286	1444	89	89	89	380	0.000	7.62	0.45	9.6	0.080	11.3	11.20	6	9.7	9.8	99.1
107	80	369	285	254	289	257	291	1413	89	87	89	380	0.000	7.39	0.46	9.1	0.109	11.8	10.96	8	9.3	9.9	98.8
112	85	382	289	257	278	257	293	1333	89	87	87	374	0.000	7.21	0.41	10.5	0.174	10.3	10.22	17	10.4	10.5	97.5
117	90	389	293	257	265	257	292	1521	89	87	87	393	0.000	6.94	0.41	6.7	0.707	13.9	13.57	59	7.7	8.1	92.1

Rec #	Tst .ET	Top Tmp F	Rht Avg F	Lft Tmp F	Bak Tmp F	Bot Tmp F	Avg Stove F	Ext1 F	Ext2 F	Ext3 F	Ext4 F	Stk Tmp F	Stk Drft "H2O	Scale kg	10min Drop kg	Stk .O2 %	Stk CO %	Stk CO2 %	Inc CO2 %	CO Fac g/kg	Stk AF	Inc AF	Comb Effic %
122	95	417	300	263	274	254	302	1304	89	87	87	372	0.000	6.76	0.41	10.8	0.238	10.1	9.83	25	10.6	10.7	96.4
127	100	402	306	265	278	252	301	1479	89	87	89	378	0.000	6.53	0.36	8.3	0.119	12.6	11.52	9	8.8	9.5	98.7
132	105	443	311	267	270	252	309	1411	89	87	87	380	0.000	6.26	0.41	8.8	0.096	12.1	11.80	7	9.1	9.3	99.0
137	110	476	317	274	272	250	318	1366	89	87	87	376	0.000	6.08	0.41	9.2	0.357	11.6	11.59	34	9.3	9.4	95.2
142	115	484	322	278	276	248	322	1241	89	87	87	356	0.000	5.90	0.36	11.2	0.780	9.4	9.25	96	10.7	10.8	87.7
147	120	491	326	283	252	250	320	1127	89	87	87	341	0.000	5.71	0.32	11.8	0.963	8.7	8.72	129	11.2	11.3	84.3
152	125	497	330	287	250	250	323	1088	89	87	87	328	0.000	5.58	0.27	12.3	1.103	8.1	8.15	158	11.7	11.6	81.4
157	130	480	335	287	242	248	318	1343	89	87	87	354	0.000	5.35	0.32	9.4	0.615	11.3	12.43	62	9.3	8.8	91.6
162	135	523	335	291	246	246	328	1354	89	87	87	367	0.000	5.08	0.45	8.2	0.375	12.6	12.30	33	8.6	8.8	95.4
167	140	532	335	298	246	246	331	1025	89	87	87	339	0.000	4.90	0.41	11.7	1.551	8.5	9.42	215	10.8	10.0	76.6
172	145	515	330	304	239	244	327	946	89	87	87	313	0.000	4.76	0.32	12.6	1.333	7.6	7.59	204	11.9	12.0	77.5
177	150	467	326	302	226	244	313	1194	87	87	87	333	0.000	4.58	0.27	10.2	0.749	10.4	10.01	83	9.8	10.1	89.2
182	155	441	322	298	231	244	307	1390	87	87	87	363	0.000	4.35	0.37	8.0	0.244	12.9	12.94	20	8.5	8.4	97.1
187	160	450	320	298	259	244	314	1464	89	87	87	370	0.000	4.13	0.41	7.5	0.734	13.1	13.09	64	8.1	8.1	91.4
192	165	454	317	300	261	242	315	1438	87	87	87	372	0.000	3.95	0.36	7.9	0.437	12.8	12.74	38	8.5	8.5	94.7
197	170	450	317	300	255	242	313	1373	87	87	87	363	0.000	3.76	0.32	9.2	0.090	11.7	12.40	7	9.3	8.9	99.0
202	175	456	317	304	261	244	317	1299	87	87	87	350	0.000	3.63	0.27	10.2	0.129	10.7	10.45	12	10.1	10.3	98.3
207	180	465	317	309	265	244	320	1249	87	87	87	346	0.000	3.49	0.23	10.9	0.246	9.9	10.13	27	10.7	10.6	96.2
212	185	512	317	315	248	246	328	1101	87	87	87	330	0.000	3.36	0.22	11.3	0.976	9.2	9.00	123	10.7	10.7	84.8
217	190	540	322	324	237	246	334	981	87	85	87	315	0.000	3.17	0.28	12.2	1.290	8.1	8.44	185	11.4	11.0	79.1
222	195	540	324	326	222	246	331	895	87	85	85	293	0.000	3.08	0.23	12.9	1.078	7.5	7.46	167	12.4	12.5	80.7
227	200	530	324	328	220	248	330	841	87	85	85	280	0.000	2.99	0.14	13.5	0.913	7.0	7.22	150	13.3	12.8	82.2
232	205	508	324	326	198	246	320	799	85	85	85	269	0.000	2.95	0.09	13.6	0.819	7.0	7.04	136	13.5	13.4	83.6
237	210	493	322	328	192	246	316	763	85	85	85	259	0.000	2.86	0.13	13.8	0.890	6.7	6.85	153	13.7	13.5	82.0
242	215	471	319	326	181	243	308	734	85	83	85	250	0.000	2.81	0.09	13.9	0.840	6.6	6.61	146	14.0	14.1	82.6
247	220	456	317	326	183	243	305	713	85	85	85	241	0.000	2.77	0.04	14.2	0.814	6.4	6.32	148	14.4	14.5	82.4
252	225	447	313	323	172	241	299	696	85	83	83	237	0.000	2.72	0.09	14.2	0.699	6.4	6.38	125	14.6	14.7	84.6
257	230	439	313	324	174	241	298	683	85	83	83	230	0.000	2.68	0.09	14.2	0.660	6.4	6.35	119	14.7	14.8	85.3
262	235	434	310	321	168	241	295	672	82	82	82	226	0.000	2.68	0.04	14.3	0.659	6.3	6.31	119	14.7	14.9	85.3
267	240	427	310	321	161	237	291	657	82	82	82	224	0.000	2.63	0.05	14.3	0.642	6.3	6.30	116	14.8	14.9	85.6
272	245	425	310	319	161	234	290	645	82	82	82	219	0.000	2.63	0.05	14.3	0.647	6.4	6.31	116	14.7	14.9	85.5
277	250	421	308	319	152	234	287	636	84	82	82	217	0.000	2.59	0.09	14.3	0.681	6.3	6.20	124	14.8	15.0	84.8
282	255	419	308	314	157	230	285	625	82	82	82	215	0.000	2.54	0.09	14.4	0.683	6.2	6.18	126	14.9	15.1	84.6
287	260	414	308	314	150	230	283	619	82	82	82	215	0.000	2.49	0.10	14.4	0.695	6.2	6.12	129	15.0	15.2	84.2
292	265	412	305	310	148	225	280	612	82	82	82	212	0.000	2.45	0.09	14.5	0.691	6.1	6.09	130	15.1	15.2	84.2
297	270	407	305	310	146	223	278	614	82	82	82	210	0.000	2.40	0.09	14.4	0.694	6.2	6.15	129	14.9	15.1	84.3
302	275	403	305	305	156	223	279	608	82	82	82	210	0.000	2.36	0.09	14.5	0.812	6.0	6.00	156	15.0	15.2	81.7
307	280	396	303	303	143	221	273	629	82	82	82	210	0.000	2.36	0.04	14.0	1.005	6.4	6.40	182	14.0	14.1	79.3
312	285	390	303	303	143	219	272	642	82	82	79	210	0.000	2.31	0.05	14.0	0.953	6.5	6.40	171	14.1	14.2	80.3
317	290	388	301	301	137	216	268	652	79	81	81	210	0.000	2.27	0.09	14.1	0.881	6.4	6.35	160	14.3	14.4	81.3
322	295	387	298	301	145	216	270	650	81	79	79	210	0.000	2.27	0.04	14.2	0.821	6.3	6.28	151	14.5	14.6	82.1
327	300	387	298	301	143	214	269	644	79	79	79	210	0.000	2.22	0.09	14.4	0.782	6.2	6.18	147	14.8	14.8	82.6
332	305	389	298	302	141	214	269	641	81	81	79	207	0.000	2.18	0.04	14.5	0.775	6.1	6.06	146	15.0	15.1	82.6
337	310	389	298	300	138	214	268	635	81	79	79	207	0.000	2.13	0.05	14.6	0.722	6.0	5.98	139	15.3	15.3	83.3
342	315	389	298	300	140	216	269	631	81	79	79	205	0.000	2.09	0.09	14.5	0.749	6.1	6.07	142	15.0	15.1	83.0
347	320	389	296	300	140	213	268	639	81	81	78	205	0.000	2.09	0.04	14.4	0.771	6.2	6.14	144	14.9	14.9	82.8
352	325	389	295	302	138	213	267	647	81	78	78	207	0.000	2.04	0.09	14.4	0.750	6.1	6.12	141	14.9	15.0	83.1

Rec #	Tst .ET	Top Tmp F	Rht Avg F	Lft Tmp F	Bak Tmp F	Bot Tmp F	Avg Stove F	Ext1 F	Ext2 F	Ext3 F	Ext4 F	Stk Tmp F	Stk Drft "H2O	Scale kg	10min Drop kg	Stk .O2 %	Stk CO %	Stk CO2 %	Inc CO2 %	CO Fac g/kg	Stk AF	Inc AF	Comb Effic %
357	330	386	295	302	140	213	267	658	80	80	78	206	0.000	2.00	0.09	14.3	0.763	6.3	6.26	141	14.7	14.7	83.1
362	335	386	293	302	142	211	267	658	80	78	78	209	0.000	1.95	0.09	14.4	0.753	6.1	6.07	142	15.0	15.1	83.0
367	340	386	293	299	144	211	267	649	80	80	78	209	0.000	1.90	0.10	14.7	0.759	5.8	5.87	151	15.5	15.4	82.1
372	345	386	291	299	140	211	265	640	80	78	78	206	0.000	1.90	0.05	14.9	0.729	5.7	5.73	147	15.8	15.8	82.5
377	350	384	290	297	133	210	263	640	78	78	78	204	0.000	1.86	0.04	14.9	0.662	5.7	5.65	134	16.0	16.1	83.8
382	355	379	288	295	135	212	262	636	80	78	78	204	0.000	1.86	0.00	15.1	0.619	5.5	5.48	128	16.5	16.6	84.3
387	360	377	286	292	133	212	260	625	80	78	78	202	0.000	1.81	0.05	15.2	0.599	5.4	5.44	126	16.7	16.7	84.5
392	365	377	286	290	137	208	260	614	80	80	77	204	0.000	1.81	0.05	15.3	0.580	5.3	5.24	124	17.0	17.2	84.7
397	370	373	284	288	135	210	258	604	79	77	77	201	0.000	1.77	0.04	15.6	0.569	5.1	5.07	128	17.6	17.7	84.3
402	375	368	279	286	139	208	256	593	79	77	77	199	0.000	1.72	0.09	15.6	0.640	5.0	5.00	147	17.5	17.7	82.5
407	380	366	277	283	133	205	253	584	77	77	77	199	0.000	1.72	0.05	15.6	0.617	5.0	5.00	141	17.7	17.7	83.1
412	385	364	272	281	137	205	252	590	79	77	77	197	0.000	1.68	0.04	15.5	0.637	5.2	5.05	142	17.3	17.6	83.0
417	390	363	272	279	137	203	251	577	79	79	77	194	0.000	1.63	0.09	15.8	0.601	4.8	4.86	144	18.2	18.2	82.8
422	395	361	268	277	137	201	249	562	79	77	77	194	0.000	1.63	0.05	16.0	0.584	4.7	4.63	143	18.6	18.8	82.9
427	400	359	266	274	132	201	246	549	79	77	77	190	0.000	1.59	0.04	16.2	0.592	4.5	4.50	152	19.2	19.2	82.0
432	405	357	263	272	128	201	244	532	77	77	77	190	0.000	1.59	0.04	16.2	0.567	4.4	4.39	146	19.4	19.6	82.6
437	410	354	261	270	136	198	244	517	79	76	76	185	0.000	1.54	0.05	16.4	0.534	4.2	4.27	144	20.1	20.1	82.8
442	415	350	259	267	123	196	239	506	79	76	76	183	0.000	1.54	0.05	16.6	0.522	4.1	4.06	144	20.6	20.9	82.8
447	420	345	254	263	130	196	238	493	78	78	76	181	0.000	1.50	0.04	16.7	0.517	4.0	3.96	148	21.1	21.2	82.4
452	425	341	254	261	119	196	234	478	78	76	76	177	0.000	1.50	0.04	16.8	0.511	3.8	3.79	152	21.7	22.0	82.1
457	430	337	250	258	123	189	231	462	76	76	76	172	0.000	1.50	0.00	17.2	0.534	3.5	3.71	174	22.9	22.2	80.0
462	435	328	248	254	112	194	227	449	78	76	76	170	0.000	1.45	0.00	17.4	0.479	3.3	3.30	163	23.9	24.1	81.0
467	440	321	245	250	125	194	227	438	76	76	76	166	0.000	1.45	0.00	17.5	0.450	3.2	3.22	160	24.7	24.7	81.3
472	445	315	241	245	118	193	223	423	76	76	76	161	0.000	1.41	0.04	17.6	0.443	3.1	3.06	163	25.3	25.5	81.0
477	450	308	237	243	114	189	218	408	78	76	76	159	0.000	1.41	0.04	17.8	0.428	3.0	2.97	164	26.1	26.1	80.9
482	455	301	232	239	110	189	214	395	76	76	76	157	0.000	1.41	0.00	17.8	0.421	2.9	2.88	167	26.6	26.7	80.7
487	460	295	232	234	110	189	212	382	78	76	76	152	0.000	1.36	0.05	17.9	0.419	2.8	2.81	168	26.8	27.1	80.6
492	465	290	230	232	116	185	211	373	78	76	76	150	0.000	1.36	0.00	17.9	0.414	2.8	2.81	166	26.9	27.1	80.7
497	470	284	223	228	118	184	207	364	75	75	75	146	0.000	1.36	0.00	17.9	0.418	2.8	2.75	166	26.8	27.5	80.7
502	475	279	221	225	107	182	203	358	75	75	75	144	0.000	1.36	0.00	17.9	0.421	2.8	2.80	169	26.8	27.1	80.5
505	478	279	219	223	101	180	200	353	75	75	75	144	0.000	1.32	0.04	17.9	0.437	2.8	2.70	176	26.7	27.8	79.9

Rec #	Tst .ET	Top Tmp F	Rht Avg F	Lft Tmp F	Bak Tmp F	Bot Tmp F	Avg Stove F	Ext1 F	Ext2 F	Ext3 F	Ext4 F	Stk Tmp F	Stk Drft "H2O	Scale kg	10min Drop kg	Stk .O2 %	Stk CO %	Stk CO2 %	Inc CO2 %	CO Fac g/kg	Stk AF	Inc AF	Comb Effic %

* Real time data is presented at 5 minute intervals. Average values appearing in this report are based on more frequent measurements

Notes:

Results Table = HHT
Filename = DauntCatCord1909212
Test Stand A
ASTM Maple, Low

Stove Name: DauntCatCord Test Date: 9/24/2019 Run #: 1 File: DauntCatCord19 Record # Start 7 Stop 154

Test Time	147	min
Wet Wood	8.06	kg
Moisture	21	dry %
Dry Wood	6.66	kg
Coal Bed	1.22	kg
Stove DeltaT	322	deg F
Tunnel CD	0.933	

Avg Stack Gasses (amb Corrected)

CO	0.212	%
CO2	12.67	%
O2	8.03	%
HC	n/m	% as CH4
TCC	0.43	% as CO2

Results

Real Time Data*

Rec #	Tst .ET	Top Tmp F	Rht Avg F	Lft Tmp F	Bak Tmp F	Bot Tmp F	Avg Stove F	Ext1 F	Ext2 F	Ext3 F	Ext4 F	Stk Tmp F	Stk Drft "H2O	Scale kg	10min Drop kg	Stk .O2 %	Stk CO %	Stk CO2 %	Inc CO2 %	CO Fac g/kg	Stk AF	Inc AF	Comb Effic %
0	0	0	0	0	0	0	0	0	0	0	0	0	0.000	0.00	0.00	0.0	0.000	0.0	0.00	0	0.0	0.0	0.0
5	5	79	77	77	81	77	78	77	77	79	77	77	0.000	1.50	-1.50	20.9	0.020	0.0	0.00	0	90.9	92.0	0.0
7	0	79	75	77	79	77	77	75	77	77	77	94	0.000	1.45	-1.45	20.8	0.024	0.1	0.00	0	84.9	92.2	0.0
12	5	132	79	81	77	75	89	79	77	77	77	216	0.000	1.36	0.14	17.7	0.080	3.2	3.29	22	26.6	26.2	96.9
17	10	225	90	96	86	75	114	90	77	77	77	390	0.000	1.13	0.32	14.6	0.143	6.3	6.35	22	15.8	15.5	96.8
22	15	255	101	115	92	79	129	701	79	79	77	260	0.000	3.13	-1.81	18.4	0.282	2.4	2.03	128	30.5	33.1	84.3
27	20	236	107	122	141	82	137	1496	79	79	79	448	0.000	2.72	-1.63	5.9	0.305	14.9	14.89	22	7.4	7.0	96.9
32	25	251	116	131	176	88	152	1520	80	80	80	470	0.000	2.27	0.77	6.5	0.260	14.3	14.70	20	7.7	7.5	97.2
37	30	279	129	141	204	101	171	1535	80	80	80	477	0.000	1.90	0.73	6.8	0.076	14.1	14.02	4	7.9	8.0	99.4
42	35	318	148	154	227	116	193	1439	80	80	80	479	0.000	1.54	0.68	6.5	0.072	14.4	13.32	4	7.8	8.4	99.4
47	40	342	165	169	232	133	208	1607	80	82	80	486	0.000	1.18	0.63	7.6	0.057	13.3	13.42	3	8.4	8.3	99.6
52	45	312	176	176	243	152	212	1756	82	80	80	496	0.000	8.89	-7.44	8.0	0.099	12.9	13.31	7	8.6	8.3	99.0
57	50	290	180	180	264	167	216	1756	82	82	80	505	0.000	8.57	0.64	6.8	0.121	14.1	13.96	8	7.9	8.0	98.8
62	55	282	180	182	282	182	222	1792	82	82	80	518	0.000	8.21	0.63	6.4	0.137	14.5	14.65	9	7.7	7.6	98.7
67	60	286	184	187	303	195	231	1752	82	82	82	540	0.000	7.80	0.68	5.1	1.059	15.4	15.21	80	6.9	7.1	89.5
72	65	297	191	195	306	206	239	1696	84	82	82	535	0.000	7.44	0.68	6.0	0.236	14.8	14.61	17	7.5	7.6	97.6
77	70	308	197	208	295	219	245	1666	82	80	82	542	0.000	7.07	0.64	6.4	0.546	14.3	14.55	43	7.6	7.4	94.0
82	75	317	204	221	304	239	257	1679	82	82	82	525	0.000	6.67	0.68	6.6	0.110	14.3	14.24	7	7.8	7.8	99.0
87	80	325	215	230	308	258	267	1644	84	82	82	512	0.000	6.35	0.63	8.0	0.052	13.0	13.31	2	8.6	8.4	99.7
92	85	338	223	241	303	280	277	1657	84	82	82	514	0.000	5.99	0.63	7.2	0.055	13.7	13.59	3	8.2	8.2	99.6
97	90	358	234	252	308	297	290	1657	84	82	82	514	0.000	5.67	0.59	7.1	0.056	13.8	13.74	3	8.1	8.1	99.6
102	95	380	247	258	308	310	301	1683	82	82	82	514	0.000	5.31	0.59	7.3	0.054	13.6	13.90	3	8.2	8.1	99.6
107	100	401	258	271	306	323	312	1727	82	82	82	542	0.000	4.94	0.64	5.6	0.727	15.0	14.89	56	7.2	7.5	92.4
112	105	460	277	290	306	334	333	1531	84	82	82	516	0.000	4.54	0.72	6.5	0.059	14.4	13.64	3	7.8	8.2	99.6
117	110	499	288	319	310	340	351	1549	84	82	82	507	0.000	4.17	0.68	7.0	0.082	13.9	13.50	5	8.0	8.3	99.3

Rec #	Tst .ET	Top Tmp F	Rht Avg F	Lft Tmp F	Bak Tmp F	Bot Tmp F	Avg Stove F	Ext1 F	Ext2 F	Ext3 F	Ext4 F	Stk Tmp F	Stk Drft "H2O	Scale kg	10min Drop kg	Stk .O2 %	Stk CO %	Stk CO2 %	Inc CO2 %	CO Fac g/kg	Stk AF	Inc AF	Comb Effic %
122	115	503	299	345	295	345	357	1568	82	82	82	522	0.000	3.81	0.63	5.9	0.141	15.0	14.45	9	7.5	7.7	98.7
127	120	535	310	373	299	349	373	1410	84	82	82	503	0.000	3.54	0.59	7.8	0.320	12.9	13.16	27	8.4	8.4	96.2
132	125	552	323	403	295	349	384	1480	84	82	82	501	0.000	3.22	0.54	7.5	0.336	13.3	13.70	28	8.2	8.0	96.1
137	130	572	334	416	290	349	392	1604	82	82	82	511	0.000	2.86	0.59	6.3	0.367	14.4	14.73	28	7.6	7.5	96.0
142	135	572	351	420	295	344	396	1641	84	82	82	522	0.000	2.54	0.63	5.6	1.025	14.8	14.63	81	7.2	7.2	89.5
147	140	559	364	418	305	342	398	1524	84	82	82	498	0.000	2.27	0.54	7.6	0.076	13.3	13.88	5	8.4	7.9	99.3
152	145	567	370	429	273	340	396	1300	84	82	82	472	0.000	2.09	0.40	9.9	0.129	11.0	10.65	11	9.9	10.1	98.4
154	147	574	377	433	277	340	400	1244	84	82	82	462	0.000	2.00	0.36	10.5	0.284	10.3	10.07	30	10.3	10.5	95.7

Rec #	Tst .ET	Top Tmp F	Rht Avg F	Lft Tmp F	Bak Tmp F	Bot Tmp F	Avg Stove F	Ext1 F	Ext2 F	Ext3 F	Ext4 F	Stk Tmp F	Stk Drft "H2O	Scale kg	10min Drop kg	Stk .O2 %	Stk CO %	Stk CO2 %	Inc CO2 %	CO Fac g/kg	Stk AF	Inc AF	Comb Effic %

* Real time data is presented at 5 minute intervals. Average values appearing in this report are based on more frequent measurements

Notes:

Results Table = HHT
Filename = DauntCatCord1909241
Test Stand A

Stove Name: DauntCatCord Test Date: 9/24/2019 Run #: 2 File: DauntCatCord19 Record # Start 13 Stop 232

Test Time	219	min
Wet Wood	9.56	kg
Moisture	21	dry %
Dry Wood	7.90	kg
Coal Bed	1.5	kg
Stove DeltaT	-32	deg F
Tunnel CD	0.933	

Avg Stack Gasses (amb Corrected)

CO	0.826	%
CO2	11.30	%
O2	9.10	%
HC	n/m	% as CH4
TCC	1.65	% as CO2

Results

Real Time Data*

Rec #	Tst .ET	Top Tmp F	Rht Avg F	Lft Tmp F	Bak Tmp F	Bot Tmp F	Avg Stove F	Ext1 F	Ext2 F	Ext3 F	Ext4 F	Stk Tmp F	Stk Drft "H2O	Scale kg	10min Drop kg	Stk .O2 %	Stk CO %	Stk CO2 %	Inc CO2 %	CO Fac g/kg	Stk AF	Inc AF	Comb Effic %
0	0	0	0	0	0	0	0	0	0	0	0	0	0.000	0.00	0.00	0.0	0.000	0.0	0.00	0	0.0	0.0	0.0
5	5	485	357	409	214	340	361	914	81	81	79	303	0.000	1.63	0.50	13.9	0.656	6.7	6.64	112	14.1	14.3	86.0
10	10	476	351	401	214	342	357	872	81	79	79	298	0.000	1.54	0.14	13.9	0.685	6.7	6.73	117	14.1	14.1	85.4
13	0	474	348	396	203	340	352	881	81	79	79	303	0.000	1.63	0.00	13.9	0.746	6.7	6.68	129	14.0	14.2	84.3
18	5	390	333	374	218	335	330	1462	81	79	79	355	0.000	10.79	-9.20	7.8	1.862	12.2	12.32	180	8.0	7.8	79.5
23	10	342	318	351	223	327	312	1563	81	79	79	385	0.000	10.48	0.50	7.6	0.774	13.0	12.67	69	8.2	8.2	90.9
28	15	309	298	331	249	318	301	1628	81	79	79	411	0.000	10.20	0.50	7.2	0.869	13.3	13.23	76	7.9	7.9	90.0
33	20	296	288	314	264	309	294	1643	79	79	79	435	0.000	9.89	0.54	6.8	1.314	13.5	13.29	114	7.6	7.8	85.8
38	25	292	277	305	268	303	289	1650	81	79	79	446	0.000	9.57	0.59	6.9	1.331	13.4	13.32	116	7.6	7.7	85.6
43	30	290	270	298	272	296	285	1667	81	79	79	468	0.000	9.21	0.63	6.2	2.016	13.7	13.63	172	7.2	7.3	80.2
48	35	292	266	294	300	285	287	1658	81	79	79	481	0.000	8.84	0.68	6.3	2.016	13.6	13.72	173	7.2	7.2	80.1
53	40	296	266	289	300	283	287	1660	81	79	79	482	0.000	8.44	0.68	6.2	2.016	13.7	13.79	172	7.2	7.2	80.2
58	45	305	264	285	318	279	290	1676	81	79	79	494	0.000	8.03	0.68	6.0	2.016	14.0	13.97	169	7.1	7.1	80.4
63	50	313	266	283	326	272	292	1691	81	79	79	500	0.000	7.62	0.72	5.8	2.016	14.1	14.07	168	7.0	7.1	80.6
68	55	320	268	283	311	272	291	1687	81	79	81	502	0.000	7.21	0.77	5.8	2.016	14.1	14.19	167	7.0	7.0	80.7
73	60	331	270	285	333	270	298	1682	81	81	79	502	0.000	6.80	0.73	5.7	2.016	14.2	14.21	166	7.0	7.0	80.8
78	65	344	274	289	326	270	301	1671	81	79	79	502	0.000	6.39	0.73	5.7	2.016	14.2	14.26	166	7.0	7.0	80.8
83	70	361	279	298	322	270	306	1673	81	81	79	498	0.000	5.99	0.72	5.7	2.016	14.2	14.28	166	7.0	7.0	80.7
88	75	400	285	311	331	270	319	1675	81	79	81	500	0.000	5.62	0.68	5.6	2.016	14.4	14.52	165	6.9	6.9	80.9
93	80	417	291	333	328	268	328	1673	83	81	81	498	0.000	5.31	0.59	5.6	1.995	14.3	14.49	163	7.0	6.9	81.0
98	85	510	300	348	341	268	354	1654	83	81	79	495	0.000	4.94	0.64	5.6	1.333	14.7	14.76	105	7.1	7.0	86.7
103	90	487	307	359	331	268	350	1671	81	81	81	493	0.000	4.63	0.59	5.9	1.517	14.3	14.32	124	7.2	7.2	84.7
108	95	484	307	370	328	270	352	1671	83	81	81	495	0.000	4.35	0.55	5.8	1.604	14.4	14.37	131	7.1	7.1	84.1
113	100	487	309	383	343	268	358	1678	83	81	81	489	0.000	4.08	0.50	6.2	0.757	14.4	14.41	60	7.5	7.4	91.9
118	105	484	311	400	339	270	361	1686	83	81	81	482	0.000	3.81	0.45	6.8	0.549	13.9	13.83	45	7.8	7.7	93.8

Rec #	Tst .ET	Top Tmp F	Rht Avg F	Lft Tmp F	Bak Tmp F	Bot Tmp F	Avg Stove F	Ext1 F	Ext2 F	Ext3 F	Ext4 F	Stk Tmp F	Stk Drft "H2O	Scale kg	10min Drop kg	Stk .O2 %	Stk CO %	Stk CO2 %	Inc CO2 %	CO Fac g/kg	Stk AF	Inc AF	Comb Effic %
123	110	568	322	411	337	270	382	1627	83	81	81	469	0.000	3.58	0.41	6.7	0.235	14.1	14.34	18	7.8	7.7	97.5
128	115	598	335	415	315	272	387	1567	83	81	81	443	0.000	3.36	0.45	7.6	0.106	13.3	13.10	7	8.3	8.5	99.0
133	120	611	343	415	307	272	390	1562	83	81	81	426	0.000	3.13	0.36	8.3	0.086	12.6	12.57	6	8.8	8.8	99.2
138	125	579	348	411	304	272	383	1489	81	81	81	402	0.000	2.95	0.36	8.7	0.089	12.2	11.91	6	9.0	9.2	99.1
143	130	551	352	402	278	272	371	1513	83	81	81	367	0.000	2.77	0.36	9.4	0.217	11.5	11.51	20	9.4	9.5	97.1
148	135	530	350	395	280	272	365	1432	83	81	81	350	0.000	2.63	0.27	9.2	0.323	11.6	10.73	31	9.3	9.9	95.7
153	140	491	343	384	261	274	351	1326	83	80	80	339	0.000	2.54	0.23	12.0	0.217	8.9	8.77	26	11.8	11.9	96.3
158	145	473	334	378	256	276	344	1286	80	78	80	339	0.000	2.45	0.18	11.7	0.170	9.2	9.12	19	11.5	11.7	97.3
163	150	456	328	371	243	276	335	1280	80	80	78	347	0.000	2.36	0.18	11.3	0.064	9.6	9.38	5	11.2	11.4	99.2
168	155	471	323	373	230	276	335	1242	80	78	78	352	0.000	2.27	0.18	11.8	0.065	9.2	9.05	6	11.6	11.8	99.2
173	160	458	317	377	232	275	332	1188	80	78	78	351	0.000	2.18	0.18	12.5	0.082	8.4	8.51	8	12.5	12.4	98.8
178	165	453	312	384	225	271	329	1143	80	78	78	345	0.000	2.09	0.18	12.9	0.101	8.0	8.06	12	13.0	13.0	98.3
183	170	447	310	384	217	273	326	1108	80	78	78	336	0.000	2.04	0.14	13.2	0.118	7.6	7.68	15	13.5	13.5	97.8
188	175	447	308	386	212	273	325	1087	80	80	78	329	0.000	2.00	0.09	13.3	0.136	7.6	7.53	18	13.5	13.7	97.5
193	180	444	305	381	204	273	322	1046	80	77	77	323	0.000	1.95	0.09	13.8	0.191	7.0	7.19	28	14.4	14.1	96.0
198	185	442	305	381	202	273	321	1003	77	77	77	316	0.000	1.90	0.05	14.0	0.230	6.8	6.71	37	14.7	14.9	94.9
203	190	438	305	379	193	275	318	955	78	78	78	310	0.000	1.86	0.09	14.4	0.306	6.4	6.43	53	15.3	15.3	92.7
208	195	438	303	375	191	271	315	957	77	77	77	305	0.000	1.81	0.05	13.8	0.272	7.0	6.98	43	14.3	14.3	94.1
213	200	453	305	375	197	273	320	1011	77	77	77	307	0.000	1.72	0.09	12.2	0.202	8.6	8.72	25	12.1	12.0	96.5
218	205	468	305	375	191	270	322	1019	79	77	77	309	0.000	1.68	0.09	12.6	0.203	8.3	8.20	26	12.5	12.6	96.3
223	210	472	309	375	186	270	323	998	77	77	77	309	0.000	1.59	0.09	13.1	0.276	7.7	7.78	40	13.2	13.1	94.5
228	215	476	312	374	190	270	325	967	77	77	77	305	0.000	1.59	0.04	13.5	0.321	7.3	7.24	49	13.7	13.8	93.3
232	219	476	309	370	184	270	322	930	77	77	77	301	0.000	1.50	0.09	13.8	0.380	7.0	6.84	61	14.1	14.3	91.8

Rec #	Tst .ET	Top Tmp F	Rht Avg F	Lft Tmp F	Bak Tmp F	Bot Tmp F	Avg Stove F	Ext1 F	Ext2 F	Ext3 F	Ext4 F	Stk Tmp F	Stk Drft "H2O	Scale kg	10min Drop kg	Stk .O2 %	Stk CO %	Stk CO2 %	Inc CO2 %	CO Fac g/kg	Stk AF	Inc AF	Comb Effic %

* Real time data is presented at 5 minute intervals. Average values appearing in this report are based on more frequent measurements

Notes:

Results Table = HHT
Filename = DauntCatCord1909242
Test Stand A
ASTM Maple, medium (4 clicks from closed)

2 Operating Instructions

A. The Dauntless FlexBurn® Controls

Two controls regulate the performance of the Dauntless FlexBurn®: a **primary air control** supplies oxygen for the fire, and a **damper** directs air flow within the stove to activate and deactivate the combustion system, Figure 2.1.

Symbols on the stove are reminders of the correct directions for using the controls. The words 'Left' and 'Right' in these directions are *facing the stove*.

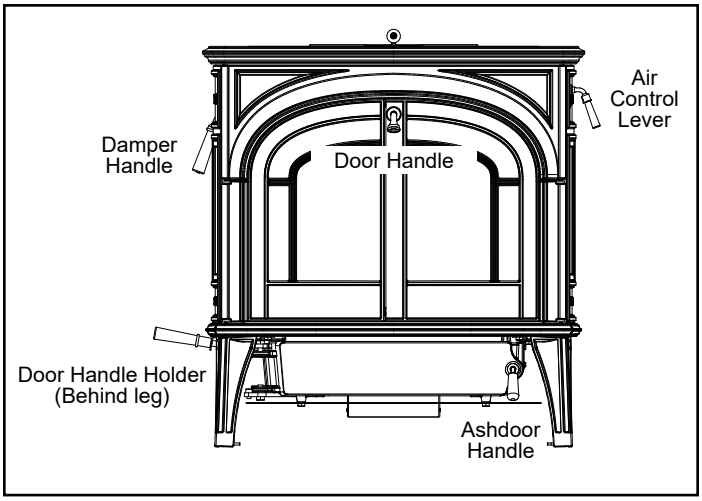

Figure 2.1 - The Dauntless FlexBurn® controls are conveniently located and easy to operate.

A Single Air Control Regulates Heat Output and Burn Time

The **primary air control lever**, on the right of the stove, controls the amount of incoming air for starting, maintaining, and reviving a fire.

Once the air control is manually set, a bi-metallic thermostat automatically maintains the heat output at a constant level for a more even heat over the life of the burn.

More air entering the stove makes the fire burn hotter and faster, while less air prolongs the burn at a lower heat output level.

For the greatest air supply and maximum heat output (but the shortest burn time), move the lever toward the front of the stove. For a fire that will last longer with less heat, move the lever toward the rear of the unit, Figure 2.2.

⚠ WARNING

This wood heater has a manufactured-set minimum low burn rate that must not be altered. It is against federal regulations to alter this setting or otherwise operate this wood heater in a manner inconsistent with operating instructions in this manual.

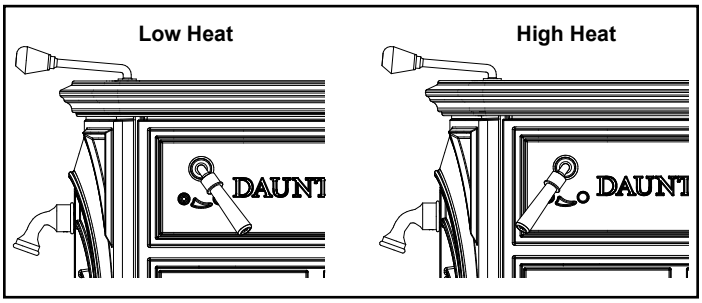

Figure 2.2 - The handle may be positioned anywhere between the two extremes for different heat levels.

A Damper Directs Air Flow Within the Stove

The **damper handle** on the left side of the stove operates the damper to direct air flow within the stove.

The damper is **open** when the handle points to the **rear**, enabling smoke to pass directly into the chimney. The damper must be open when starting or reviving a fire, and whenever the griddle or doors are opened.

The damper is **closed** when the handle points **down.** Smoke travels through the secondary combustion system where it can be further burned, before passing up the chimney, Figure 2.3.

The damper should always be either fully open or fully closed. There are no intermediate positions. When closing the damper, be sure to pull firmly enough to snap the handle into the locked position.

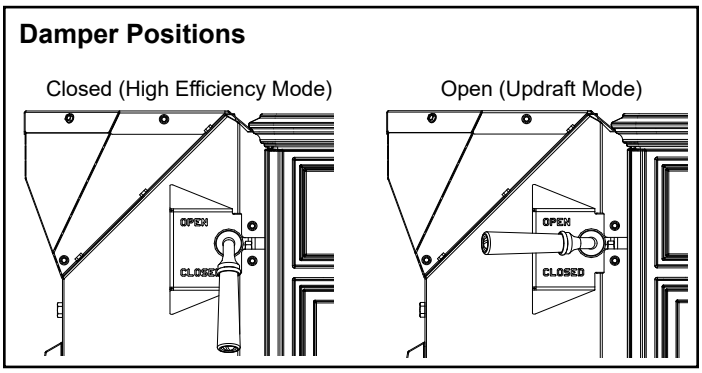

Figure 2.3 - The damper is either open or closed. There are no intermediate positions.

B. Conditioning Your Stove

Cast iron is extremely strong, but it can be broken with a sharp blow from a hammer or from the thermal shock of rapid and extreme temperature change.

The cast plates expand and contract with changes in temperature. When you first begin using your Dauntless FlexBurn®, minimize thermal stress by letting the plates adjust gradually during three or four initial break-in fires.

C. Wood Burning Operation

Burn only solid wood in the Dauntless FlexBurn® Wood Stove, and burn it directly on the grate. Do not elevate the fuel. Do not burn coal or other fuels. In the United States, it is against the law to operate this wood heater in a manner inconsistent with operating instructions in this manual.

The bypass damper must be open when starting a fire or when refueling.

Do not use chemicals or fluids to start the fire. Do not burn garbage. Never use flammable fluids such as gasoline, gasoline type lantern fuel, kerosene, charcoal lighter fluid, naptha, engine oil or similar liquids to start or "freshen up" a fire in this heater. Keep all such liquids well away from the heater while it is in use.

The following procedures are important for reliable, clean and efficient operation of your woodstove. Recommend 16" logs Properly seasoned (up to a year for denser woods) Split to 3" to 6" cross sections

Cold start:

When starting your stove at room temperature and when no burning coals are present the following kindling procedure has been found to be the most reliable.

Stack about 4 lbs of finely split kindling (1" diameter or less 10 to 20 pcs) in a 'log cabin' style directly against the rear wall. Place a small amount of newspaper on top of this pile with one or two small pieces of kindling on top. This is referred to as a top down method and while providing a slower start, also serves to preheat the combustion properly resulting in a reliable start., Figure 2.4.

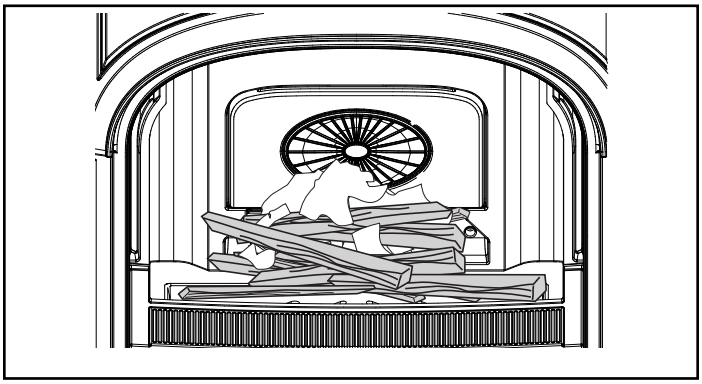

Figure 2.4 - Start the fire with newspaper and dry kindling.

With the bypass damper open and the primary air set to its highest position, light the newspaper. Leave the front door cracked until the kindling ignites, then close the doors.

After most of the kindling has burned into coals (15 to 20 minutes), open the front doors and push remaining coals and unburned wood against the rear wall. Add several pieces of larger split wood between 2 to 3 inches in diameter (about 6 lbs) directly against the rear wall and on top of the kindling coals. Close the doors and bypass to engage the combustion system. The air should remain on high for up to one hour or until the wood is mostly converted to coals.

After a hot bed of coals is produced, open the door and bypass damper and push the remaining coals again toward the rear wall. Add large pieces of wood starting against the rear wall and on top of the coals. Close the doors and bypass immediately after loading the stove.

Ideally, allow this wood load to burn at the highest air setting for the entire wood load. If this is not possible, the wood should burn for at least 30 minutes prior to reducing the primary air setting.

D. Ways to Add Fuel

To open the front doors, insert the handle into the door latch stub and turn it clockwise, Figure 2.5.

To close them, always close the left door first. Turn the handle in the right door to the left and up (to the open position) and close it. Finally, push on the door as you turn the handle counterclockwise. The doors will draw in slightly, and the handle should offer some resistance as you turn it to the closed position.

To reduce the risk of breaking the glass, avoid striking the glass or slamming the doors.

When you are not using the door handle, store it in the holder behind the left front leg of the stove.

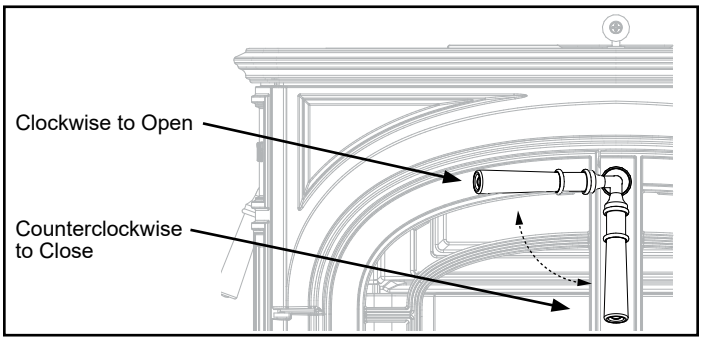

Figure 2.5 - To open the front doors, turn the handle clockwise.

For best results when refueling, wear long-cuffed stove gloves to protect your hands and forearms.

Reloading a hot stove:

When a wood load is added to a hot bed of coals (continuous use), open the bypass damper and either the top or front loading doors. Stir the hot coals to allow ash to fall through the grate. Hot coals should then be pushed against the rear wall and leveled depending on the amount of coals. Add fresh wood and close the loading door and bypass damper. If the coals are glowing and hot, it is possible to set the air control to any setting immediately after loading the stove.

Reloading a warm stove:

If the stove is relatively cold (for instance after a long overnight burn), the coal bed may need to be re-energized prior to adding a large load of wood. Open the bypass damper and either the top or front loading door. Stir the coals to allow ash to fall through the grate. Push the remaining coals toward the rear wall. Close the door(s) and bypass damper and set the primary air to the highest position. Allow the coals to re-ignite and heat the system for 10 to 15 minutes. Once the coals are glowing, a fresh batch of wood may be added following the “hot stove” procedure above.

A proper bed of coals is critical to the performance of the Dauntless stove. The rear refractory wall of the stove should be almost entirely white in color with proper operation. This indicates the combustion system is running at a proper elevated temperature. If the rear wall is black with creosote or develops a dark brown color, it is likely that the coal bed is not sufficiency large enough or hot enough. Revisit the above instructions and adjust the amount of kindling or time at high air settings to get the system hotter. Wood size or excessive moisture may also cause lower than desirable stove temperatures.

While not required, operating your stove with the catalytic combustor installed creates optimum conditions for secondary combustion and will increase your efficiency up to 15% on low burn, making sure you get the most heat out of each load of wood.

The catalytic element is a metal “honeycomb” coated with the catalytic material. The element sits at the bottom of the secondary combustion chamber. Smoke, gases and particulates that are not fully combusted during the secondary combustion process pass through the catalyst, creating a tertiary burn. This results in higher efficiency and lower emissions.

The catalyst will initiate combustion of smoke and particulates at 500° - 600°F (260° - 315°C), half the temperature normally required for unaided secondary combustion. If you followed the startup operation steps in the previous section the stove will be sufficiently hot to allow the combustor to work. Once the combustor starts working, heat generated by burning the smoke will keep it working.

To determine whether the combustor is operating, refer to the temperature probe which shows the operating range of the catalytic combustor. This is located on the back of the stove and is viewed from the top.

NOTE: It will take several minutes after closing the bypass damper for the temperature probe to fully adjust to the new temperature. If the probe indicator is below the operate catalyst range, add fuel or open the bypass damper to allow the fire to further build before engaging the catalyst again.

If the probe indicator is above the operate catalyst range, the catalytic combustor is running too hot and may be damaged. In many cases, decreasing the primary air can reduce the catalyst temperature and adding less wood with each loading can also help if overheating is persistent. Do not add wood to the stove if the probe reads above the operate catalyst range.

Avoid using a full load of very dry wood in the firebox, such as dry slab wood or wood with below 14% moisture content. This may result in continuous very high temperatures in the secondary combustion area and damage the combustor.

Never burn treated wood, garbage, solvents or trash. All of these may poison the catalyst and prevent it from operating properly. Never burn cardboard or loose paper except for kindling purposes. Never burn coal; doing so can produce soot or large flakes of char or fly ash that can coat the combustor and cause smoke to spill into the room. Coal smoke can also poison the catalyst so that it won’t operate properly.

NOTE: The metal catalytic combustor is fragile and will crack if subjected to thermal shock. Thermal shock can occur when refueling with wet wood or closing the bypass damper too early after refueling.

⚠ WARNING

DO NOT OPERATE THE STOVE WITH THE ASH DOOR OPEN. OPERATION WITH THE ASH DOOR OPEN CAN CAUSE AN OVER-FIRING CONDITION TO OCCUR. OVER-FIRING THE STOVE IS DANGEROUS AND CAN RESULT IN PROPERTY DAMAGE, INJURY OR LOSS OF LIFE.

Andirons Help Protect the Glass
Your stove has andirons to keep logs away from the glass panels. The andirons are essential to maintain clear fire viewing, and should be left in place. Since the andirons may slightly hinder refueling through the front doors, most stove owners will prefer the convenience of top loading through the griddle. Do not place fuel between the andirons and the doors.

Burn Only High-Quality Wood
The Dauntless FlexBurn® is designed to burn natural wood only; do not burn fuels other than that for which it was designed.

IMPORTANT: Do not burn any type of artificial or synthetic materials such as fire starter logs (containing wax) in this appliance. Never burn liquid-based fuels such as kerosene, gasoline or alcohol.

Burning any materials not allowed in these instructions, or over-firing the stove, may void the warranty.

You'll enjoy the best results when burning wood that has been adequately air-dried. The wood should be 16" - 18" (406-457 mm) in length. Avoid burning "green" wood that has not been properly seasoned. (**Note:** Properly seasoned firewood has a moisture content below 20 percent.) Do not burn construction materials; they often contain chemicals and metals that can damage the inside surfaces of the stove and pollute the air. Do not burn ocean driftwood; when it burns, the salt it contains will attack the cast iron.

The best hardwood fuels include oak, maple, beech, ash, and hickory that has been split, stacked, and air-dried outside under cover for at least one year.

If hardwood is not available, you can burn softwoods that include tamarack, yellow pine, white pine, Eastern red cedar, fir, and redwood. These should also be properly dried.

Store split wood under cover to keep it dry. Even for short-term storage, be sure to keep wood a safe distance from the stove and keep it out of the areas around the stove used for refueling and ash removal.

Surface Thermometer is a Valuable Guide to Operation
An optional surface thermometer tells you when to adjust the air control, and when to refuel, Figure 2.8.

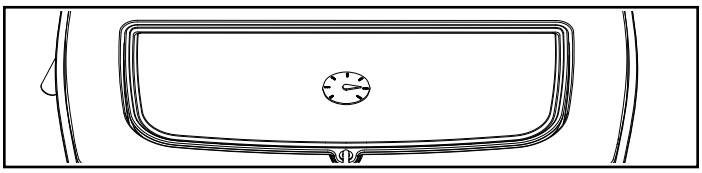

Figure 2.8 - Take temperature readings with a thermometer located in the middle of the griddle.

For example, when the thermometer registers at least 450°F (230°C) on the stove top after start-up you know the stove is hot enough and it may be time to close the damper if a sufficient ember bed has also been established. Note that the stove will warm up much sooner than the chimney, though; a warm chimney is the key to easy, effective stove operation. When thermometer readings drop below 350°F. (175°C) it's time to adjust the air control for a higher burn rate or to reload the stove. A temperature reading over 650°F. (340°C) is a sign to reduce the air supply to slow the burn rate.

Use the following temperature ranges as a guide:

- Readings in the 350°-500°F. (175°-260°C) range indicate low to medium heat output.
- 500°-600°F. (260°-315°C) readings indicate medium heat output.
- Readings of 600°-650°F. (315-340°C) indicate high heat output. Operating your Dauntless FlexBurn® continuously at griddle temperatures higher than 650° F (340°C) may damage the cast iron or enamel finish.

Use the Air Control Settings that Work Best for You
No single air control setting will fit every situation. Each installation will differ depending on the quality of the fuel, the amount of heat desired, and how long you wish the fire to burn; outdoor air temperature and pressure also affect draft.

The control setting also depends on your particular installation's "draft," or the force that moves air from the stove up through the chimney. Draft is affected by such things as the length, type, and location of the chimney, local geography, nearby obstructions, and other factors.

Too much draft may cause excessive temperatures in the Dauntless FlexBurn®, and could even damage the stove. On the other hand, too little draft can cause backpuffing into the room and/or the "plugging" of the chimney.

How do you know if your draft is excessively high or low? Symptoms of too much draft include an uncontrollable burn or a glowing-red stove part. Signs of weak draft are smoke leaking into the room through the stove or chimney connector joints or low heat output.

Run 1

High Burn 10-minute data

Efficiency and Heat Output Results
Kindling and start-up fuel removed from calculations

Wood Heater Test Data

Run: 1

Manufacturer: Hearth & Home
Model: Dauntless-CAT
Tracking No.: 2389
Project No.: 061WS104E
Test Date: 02-Oct-19
Beginning Clock Time: 12:54

Total Sampling Time: 186 min
Recording Interval: 1 min
Background Sample Volume: _____ cubic feet

Meter Box Y Factor: 0.992 (1) 0.989 (2) _____ (Amb)

Barometric Pressure:	Begin	Middle	End	Average
	29.34		29.47	29.41 0

OMNI Equipment Numbers: _____

PM Control Modules: 371, 372
Dilution Tunnel MW(dry): 29.00 lb/lb-mole
Dilution Tunnel MW(wet): 28.78 lb/lb-mole
Dilution Tunnel H2O: 2.00 percent
Dilution Tunnel Static: -0.285 "H2O
Tunnel Area: 0.19635 ft2
Pitot Tube Cp: 0.99

Avg. Tunnel Velocity: 19.28 ft/sec.
Initial Tunnel Flow: 211.9 scfm
Average Tunnel Flow: 207.9 scfm
Post-Test Leak Check (1): 0.000 cfm @ 8 in. Hg
Post-Test Leak Check (2): 0.000 cfm @ 13 in. Hg
Average Test Piece Fuel Moisture: 22.81 Dry Basis %

Technician Signature: _____

Velocity Traverse Data

	Pt.1	Pt.2	Pt.3	Pt.4	Pt.5	Pt.6	Pt.7	Pt.8	Center	
Initial dP	0.072	0.080	0.076	0.078	0.080	0.082	0.080	0.078	0.085	"H2O
Temp:	69	69	69	69	69	69	69	69	69	°F

V_{strav} 18.83 ft/sec V_{scent} 19.54 ft/sec F_p 0.964

	Particulate Sampling Data														Fuel Weight (lb)		Temperature Data (°F)													Stack Gas Data		
Elapsed Time (min)	Gas Meter 1 (ft^3)	Gas Meter 2 (ft^3)	Sample Rate 1 (cfm)	Sample Rate 2 (cfm)	Orifice dH 1 ("H_2O)	Meter 1 Temp (°F)	Meter 1 Vacuum ("Hg)	Orifice dH 2 ("H_2O)	Meter 2 Temp (°F)	Meter 2 Vacuum ("Hg)	Dilution Tunnel (°F)	Dilution Tunnel Center dP	Pro. Rate 1	Pro. Rate 2	Scale Reading	Weight Change	Firebox Top	Firebox Bottom	Firebox Back	Firebox Left	Firebox Right	Avg. Stove Surface	Catalyst Exit	Stack	Filter 1	Dryer Exit 1	Filter 2	Dryer Exit 2	Ambient	Draft ("H_2O)	CO_2 (%)	CO (%)
0	0.000	0.000			1.53	72	0.34	2.24	72	-1.5	70	0.090			3.5		78	70	69	69	69	71	68	68	82	62	82	60	68	0.013	0.14	0
1	0.148	0.167	0.15	0.17	2.13	72	0.5	1.75	72	-3	75	0.090	87	93	3.5	-0.04	79	70	69	69	69	71	69	67	81	59	81	59	68	0.010	0.08	0
2	0.307	0.337	0.16	0.17	2.14	72	0.34	1.76	72	-3.2	80	0.090	94	95	3.4	-0.11	83	71	70	69	69	72	69	68	80	59	81	59	68	0.010	0.32	0.02
3	0.466	0.509	0.16	0.17	2.09	72	0.28	1.77	72	-3.1	76	0.090	94	95	3.3	-0.09	98	71	71	69	69	76	69	68	80	59	81	59	68	0.010	0.58	0.04
4	0.625	0.680	0.16	0.17	2.11	72	0.29	1.74	72	-3.1	79	0.090	94	95	3.2	-0.07	121	73	75	70	69	82	69	68	80	59	81	59	68	0.010	2.08	0.06
5	0.782	0.851	0.16	0.17	2.06	72	0.48	1.74	72	-3.1	82	0.090	93	95	2.6	-0.60	139	75	79	71	69	87	69	68	81	59	81	59	68	0.010	4.21	0.07
6	0.939	1.022	0.16	0.17	2.08	72	0.24	1.73	72	-3.1	84	0.090	93	96	2.8	0.11	156	78	83	72	69	92	69	68	81	58	81	59	68	0.010	5.16	0.11
7	1.095	1.192	0.16	0.17	2.05	72	0.13	1.73	72	-3.1	89	0.080	98	101	2.6	-0.11	174	81	88	73	69	97	70	68	81	58	81	59	68	0.010	5.3	0.1
8	1.251	1.362	0.16	0.17	2.02	72	0.12	1.72	72	-3.2	89	0.090	93	95	2.6	-0.09	196	85	94	75	69	104	70	68	81	58	81	59	68	0.011	5.43	0.12
9	1.405	1.531	0.15	0.17	2.01	72	0.55	1.72	72	-3.2	88	0.090	92	95	2.4	-0.15	210	89	98	76	69	108	71	84	81	58	81	59	69	0.011	6.24	0.1
10	1.559	1.699	0.15	0.17	1.96	72	0.44	1.70	72	-3.2	96	0.090	92	95	2.0	-0.40	227	92	104	78	69	114	72	67	81	58	81	59	69	0.011	5.61	0.13
11	1.710	1.866	0.15	0.17	1.90	72	0.33	1.68	72	-3.1	99	0.090	91	95	1.9	-0.11	248	96	111	80	69	121	73	3218	81	58	82	59	69	0.011	6.3	0.19
12	1.860	2.033	0.15	0.17	1.86	73	0.07	1.64	72	-3.1	103	0.090	90	95	1.7	-0.15	268	101	117	83	69	128	74	3218	81	58	82	59	69	0.011	7.75	0.23
13	2.008	2.199	0.15	0.17	1.84	73	0.16	1.65	72	-3.1	104	0.080	95	100	1.6	-0.13	286	106	121	86	69	134	76	3218	81	58	82	59	69	0.011	7.96	0.24
14	2.156	2.365	0.15	0.17	1.84	73	0.1	1.64	72	-3.2	106	0.080	95	100	1.5	-0.11	306	111	126	88	70	140	78	3218	81	58	83	59	69	0.011	8.35	0.32
15	2.303	2.530	0.15	0.17	1.83	73	0.07	1.63	72	-3.4	106	0.090	89	94	1.3	-0.15	321	117	131	91	70	146	80	518	80	58	85	60	69	0.011	8.71	0.3
16	2.463	2.711	0.16	0.18	2.40	73	-0.26	1.94	72	-4	105	0.090	96	103	6.9	5.56	336	122	135	93	71	151	83	500	82	58	85	59	69	0.011	8.74	0.29
17	2.629	2.887	0.17	0.18	2.32	73	0.03	1.85	72	-3.7	122	0.080	108	108	6.8	-0.11	342	126	138	95	72	155	197	323	82	58	85	59	69	0.011	8.46	0.26
18	2.793	3.062	0.16	0.18	2.15	73	-0.17	1.81	72	-3.9	92	0.090	98	98	6.7	-0.09	330	127	137	100	73	153	663	288	82	58	85	59	69	0.011	7.04	0.18
19	2.951	3.233	0.16	0.17	2.25	73	-0.54	1.78	72	-4.4	89	0.080	100	102	6.5	-0.15	322	128	138	103	75	153	958	296	82	58	83	60	69	0.011	6.12	0.48
20	3.114	3.404	0.16	0.17	2.25	73	-1.11	1.76	72	-5.7	87	0.090	97	96	6.5	-0.09	314	129	139	106	76	153	906	291	81	58	83	59	69	0.011	8.37	0.62
21	3.278	3.575	0.16	0.17	2.29	73	-1.39	1.79	72	-6.4	87	0.090	97	96	6.3	-0.15	306	130	140	108	78	152	1043	300	81	58	83	59	69	0.011	9.19	0.7
22	3.443	3.748	0.17	0.17	2.27	73	-1.39	1.78	72	-6.5	87	0.090	98	97	6.2	-0.11	299	131	141	112	80	153	1155	316	81	59	82	60	69	0.011	8.97	0.78
23	3.607	3.921	0.16	0.17	2.27	73	-2.01	1.75	72	-6.7	87	0.090	97	97	6.0	-0.15	295	133	144	116	82	154	1213	325	82	59	82	60	69	0.011	11.1	0.54
24	3.771	4.090	0.16	0.17	2.21	73	-1.68	1.77	72	-6.8	87	0.080	103	100	6.0	-0.09	292	134	146	120	84	155	1257	336	82	59	82	60	69	0.011	11.57	0.76
25	3.934	4.262	0.16	0.17	2.26	73	-2.14	1.78	72	-7.3	87	0.090	97	96	5.8	-0.15	290	136	148	125	86	157	1304	345	82	59	82	60	69	0.011	12.39	0.64
26	4.097	4.434	0.16	0.17	2.27	73	-2.58	1.79	72	-7.5	87	0.090	97	96	5.7	-0.09	289	138	150	130	88	159	1277	350	82	59	83	60	69	0.011	13.16	0.46
27	4.259	4.605	0.16	0.17	2.38	73	-3.01	1.73	72	-7.7	88	0.090	96	96	5.6	-0.15	290	139	153	136	91	162	1206	351	82	59	83	60	70	0.011	13.28	0.39
28	4.425	4.777	0.17	0.17	2.38	73	-3.44	1.76	72	-8.3	88	0.090	99	96	5.4	-0.15	292	140	155	141	93	164	1329	361	81	59	83	60	70	0.011	12.58	0.46
29	4.590	4.950	0.17	0.17	2.29	73	-2.84	1.79	72	-8.1	88	0.090	98	97	5.3	-0.11	294	141	156	145	96	166	1241	363	81	60	83	60	70	0.011	13.32	0.62
30	4.755	5.122	0.17	0.17	2.27	73	-3.02	1.78	72	-8.2	88	0.090	98	96	5.2	-0.13	297	143	158	150	98	169	1226	365	81	60	83	60	70	0.011	13.38	0.34
31	4.918	5.294	0.16	0.17	2.23	73	-3.3	1.77	72	-8.3	88	0.080	103	102	5.0	-0.11	302	144	159	156	101	172	1217	367	81	60	82	60	70	0.011	12.84	0.22
32	5.081	5.466	0.16	0.17	2.23	73	-3.19	1.76	72	-8.3	88	0.090	97	96	4.9	-0.11	306	145	161	160	104	175	1217	369	81	60	82	60	70	0.011	12.57	0.21
33	5.245	5.638	0.16	0.17	2.25	73	-2.94	1.76	72	-8.3	88	0.090	97	96	4.8	-0.13	311	146	162	164	107	178	1191	369	82	60	82	60	70	0.011	12.44	0.19
34	5.407	5.811	0.16	0.17	2.26	73	-3.33	1.77	72	-8.5	89	0.090	96	97	4.7	-0.11	317	148	164	167	109	181	1164	370	82	60	82	60	70	0.011	12.27	0.18
35	5.571	5.983	0.16	0.17	2.30	73	-3.34	1.77	72	-8.6	89	0.090	97	97	4.6	-0.09	321	149	165	170	112	183	1139	370	82	61	82	60	70	0.011	11.67	0.21
36	5.735	6.154	0.16	0.17	2.27	73	-3.65	1.87	72	-9.2	89	0.090	97	96	4.5	-0.11	326	150	167	172	115	186	1166	371	82	61	82	60	70	0.010	11.15	0.23

Wood Heater Test Data

Run: 1

Manufacturer: Hearth & Home
Model: Dauntless-CAT
Tracking No.: 2389
Project No.: 061WS104E
Test Date: 02-Oct-19
Beginning Clock Time: 12:54

Total Sampling Time: 186 min
Recording Interval: 1 min
Background Sample Volume: _____ cubic feet

Meter Box Y Factor: 0.992 (1) 0.989 (2) _____ (Amb)

Barometric Pressure:	Begin	Middle	End	Average
	29.34		29.47	29.41 0

OMNI Equipment Numbers: _____

PM Control Modules: 371, 372
Dilution Tunnel MW(dry): 29.00 lb/lb-mole
Dilution Tunnel MW(wet): 28.78 lb/lb-mole
Dilution Tunnel H2O: 2.00 percent
Dilution Tunnel Static: -0.285 "H2O
Tunnel Area: 0.19635 ft2
Pitot Tube Cp: 0.99

Avg. Tunnel Velocity: 19.28 ft/sec.
Initial Tunnel Flow: 211.9 scfm
Average Tunnel Flow: 207.9 scfm
Post-Test Leak Check (1): 0.000 cfm @ 8 in. Hg
Post-Test Leak Check (2): 0.000 cfm @ 13 in. Hg
Average Test Piece Fuel Moisture: 22.81 Dry Basis %

Technician Signature: _____

Velocity Traverse Data

	Pt.1	Pt.2	Pt.3	Pt.4	Pt.5	Pt.6	Pt.7	Pt.8	Center	
Initial dP	0.072	0.080	0.076	0.078	0.080	0.082	0.080	0.078	0.085	"H2O
Temp:	69	69	69	69	69	69	69	69	69	°F

V_{strav} 18.83 ft/sec V_{scent} 19.54 ft/sec F_p 0.964

	Particulate Sampling Data														Fuel Weight (lb)		Temperature Data (°F)													Stack Gas Data		
Elapsed Time (min)	Gas Meter 1 (ft^3)	Gas Meter 2 (ft^3)	Sample Rate 1 (cfm)	Sample Rate 2 (cfm)	Orifice dH 1 ("H_2O)	Meter 1 Temp (°F)	Meter 1 Vacuum ("Hg)	Orifice dH 2 ("H_2O)	Meter 2 Temp (°F)	Meter 2 Vacuum ("Hg)	Dilution Tunnel (°F)	Dilution Tunnel Center dP	Pro. Rate 1	Pro. Rate 2	Scale Reading	Weight Change	Firebox Top	Firebox Bottom	Firebox Back	Firebox Left	Firebox Right	Avg. Stove Surface	Catalyst Exit	Stack	Filter 1	Dryer Exit 1	Filter 2	Dryer Exit 2	Ambient	Draft ("H_2O)	CO_2 (%)	CO (%)
37	5.899	6.327	0.16	0.17	2.35	73	-4.16	1.76	72	-9.5	89	0.090	97	97	4.4	-0.09	331	151	168	175	118	189	1163	372	82	61	82	60	70	0.010	10.9	0.3
38	6.065	6.499	0.17	0.17	2.29	73	-4.27	1.75	72	-9.6	89	0.080	105	102	4.3	-0.15	337	153	170	176	121	191	1159	374	81	61	82	60	70	0.010	10.78	0.36
39	6.229	6.669	0.16	0.17	2.22	73	-4.58	1.72	72	-9.7	90	0.090	98	96	4.1	-0.11	342	154	171	178	125	194	1154	375	81	61	83	60	70	0.010	10.65	0.37
40	6.392	6.839	0.16	0.17	2.27	73	-4.98	1.72	72	-10	90	0.090	97	96	4.1	-0.09	346	156	173	180	128	197	1166	375	81	61	83	60	71	0.010	10.56	0.4
41	6.555	7.011	0.16	0.17	2.22	73	-5.23	1.76	72	-10.7	90	0.080	103	102	3.9	-0.11	351	157	175	180	131	199	1172	376	81	62	83	60	71	0.010	10.17	0.5
42	6.719	7.182	0.16	0.17	2.29	73	-5.21	1.73	72	-10.8	91	0.090	98	96	3.9	-0.09	352	159	177	181	134	201	1156	376	82	62	83	60	71	0.010	10.32	0.52
43	6.885	7.352	0.17	0.17	2.32	73	-5.46	1.75	72	-10.7	90	0.090	99	96	3.7	-0.11	357	161	178	182	137	203	1135	377	82	62	82	60	71	0.010	10.09	0.54
44	7.051	7.523	0.17	0.17	2.33	73	-5.24	1.74	72	-10.8	91	0.080	105	102	3.6	-0.15	364	162	180	183	140	206	1131	377	82	62	82	60	71	0.010	9.78	0.56
45	7.219	7.695	0.17	0.17	2.34	73	-5.19	1.76	72	-10.6	91	0.090	100	97	3.5	-0.09	369	164	182	183	143	208	1139	378	82	62	82	61	71	0.010	9.71	0.53
46	7.385	7.867	0.17	0.17	2.34	73	-5.5	1.74	72	-10.7	91	0.090	99	97	3.4	-0.11	370	166	185	184	146	210	1130	379	82	62	82	61	71	0.010	9.95	0.48
47	7.553	8.039	0.17	0.17	2.37	73	-5.08	1.79	72	-10.6	91	0.080	106	103	3.3	-0.09	372	170	187	184	148	212	1104	376	82	62	82	61	71	0.010	10.52	0.47
48	7.721	8.212	0.17	0.17	2.33	73	-5.18	1.79	72	-10.6	91	0.090	100	97	3.2	-0.15	375	173	189	185	151	215	1102	375	82	63	82	61	71	0.010	10.44	0.45
49	7.887	8.386	0.17	0.17	2.31	73	-5.23	1.79	72	-10.6	91	0.080	105	104	3.0	-0.11	377	176	192	184	154	217	1171	378	82	63	82	61	71	0.010	10.2	0.42
50	8.053	8.559	0.17	0.17	2.30	73	-5.19	1.80	72	-10.6	92	0.080	105	103	3.0	-0.09	381	179	194	185	157	219	1162	378	81	63	83	61	71	0.010	10.38	0.41
51	8.218	8.733	0.16	0.17	2.33	73	-5.17	1.82	72	-10.6	91	0.080	104	104	2.8	-0.11	384	183	196	186	159	222	1133	377	82	63	83	61	71	0.010	10.7	0.45
52	8.385	8.908	0.17	0.17	2.35	74	-4.82	1.82	72	-10.5	91	0.090	99	98	2.7	-0.15	388	186	198	186	162	224	1132	376	82	63	83	61	71	0.011	10.37	0.39
53	8.548	9.083	0.16	0.18	2.20	74	-4.93	1.81	72	-10.3	92	0.080	103	104	2.6	-0.09	394	190	200	187	164	227	1160	377	82	63	83	61	72	0.011	10.34	0.37
54	8.711	9.257	0.16	0.17	2.25	74	-4.74	1.82	72	-10.4	92	0.080	103	104	2.5	-0.11	399	194	203	188	167	230	1144	375	82	63	83	61	72	0.011	10.74	0.43
55	8.875	9.431	0.16	0.17	2.26	74	-4.75	1.81	72	-10.3	92	0.090	98	98	2.4	-0.09	404	198	206	188	169	233	1121	374	82	64	83	61	72	0.011	10.56	0.44
56	9.038	9.606	0.16	0.18	2.24	74	-4.74	1.81	72	-10.3	92	0.090	97	98	2.4	-0.04	410	202	208	189	171	236	1105	373	82	64	82	61	72	0.011	10.17	0.41
57	9.202	9.780	0.16	0.17	2.23	74	-4.98	1.83	72	-10.3	92	0.090	98	98	2.2	-0.15	417	206	211	189	174	239	1079	372	82	64	82	61	72	0.011	10.26	0.42
58	9.365	9.956	0.16	0.18	2.23	74	-5.1	1.83	72	-10.2	92	0.080	103	105	2.1	-0.11	422	210	214	189	177	242	1093	371	82	64	82	61	71	0.011	10.27	0.43
59	9.530	10.130	0.16	0.17	2.36	74	-5.01	1.80	72	-10	92	0.090	98	98	2.1	-0.04	425	214	216	190	179	245	1082	371	82	64	82	61	72	0.011	10.48	0.34
60	9.695	10.304	0.17	0.17	2.24	74	-4.88	1.77	72	-10.1	92	0.090	98	98	20.3	18.22	428	219	219	190	181	247	1074	370	82	64	82	62	72	0.011	10.61	0.25
61	9.856	10.476	0.16	0.17	2.98	74	0.18	1.77	72	-10.2	92	0.090	96	97	20.0	-0.23	430	223	221	190	184	250	1086	369	82	64	83	62	72	0.012	10.3	0.26
62	10.023	10.648	0.17	0.17	2.21	74	0.22	1.75	72	-10.3	92	0.090	99	97	19.8	-0.20	432	227	224	191	186	252	1081	369	81	64	83	62	72	0.012	10.12	0.3
63	10.185	10.808	0.16	0.16	2.18	74	0.17	1.32	73	-11.5	105	0.090	97	91	19.7	-0.15	423	231	225	186	189	251	1286	352	82	64	83	62	72	0.011	10.19	0.31
64	10.348	10.956	0.16	0.15	2.30	74	-0.06	1.24	72	-12.4	95	0.090	97	84	19.6	-0.13	407	233	224	186	191	248	1518	380	82	64	83	62	72	0.011	7.13	0.54
65	10.514	11.092	0.17	0.14	2.32	74	0.1	1.64	72	-2.8	94	0.080	105	81	19.4	-0.20	393	234	223	188	194	246	1570	396	82	64	83	62	72	0.011	11.67	3.25
66	10.678	11.267	0.16	0.17	2.26	74	0.23	1.82	73	-3.1	94	0.090	98	98	19.2	-0.15	382	234	223	189	196	245	1581	403	82	64	83	62	72	0.011	13.75	3.03
67	10.842	11.440	0.16	0.17	2.24	74	0.5	1.78	72	-3.3	94	0.080	104	103	19.0	-0.20	372	234	222	189	199	243	1590	409	82	64	83	62	72	0.011	14.68	2.57
68	11.005	11.613	0.16	0.17	2.24	74	0.12	1.78	73	-3.3	94	0.080	103	103	18.8	-0.15	362	233	221	193	201	242	1591	411	82	64	83	62	72	0.011	14.88	2.59
69	11.168	11.787	0.16	0.17	2.24	74	0.09	1.79	72	-3.2	94	0.080	103	104	18.7	-0.20	354	233	220	198	204	242	1583	412	82	64	83	62	72	0.011	14.9	2.74
70	11.332	11.960	0.16	0.17	2.23	74	0.01	1.79	73	-3.4	95	0.080	104	103	18.5	-0.15	347	233	219	202	206	241	1566	414	82	64	83	62	72	0.011	14.84	2.96
71	11.494	12.133	0.16	0.17	2.28	74	0.46	1.79	73	-3.2	94	0.080	102	103	18.3	-0.15	341	233	219	205	208	241	1561	414	82	64	84	62	72	0.011	14.61	3.64
72	11.659	12.306	0.17	0.17	2.29	74	0.37	1.78	73	-3.5	95	0.090	98	97	18.1	-0.20	335	233	218	208	211	241	1588	414	82	64	84	63	72	0.011	14.5	4
73	11.825	12.480	0.17	0.17	2.29	74	0.18	1.78	73	-3.3	95	0.080	105	104	18.1	-0.09	330	233	217	210	213	241	1597	414	82	64	84	63	72	0.011	14.49	3.82

Wood Heater Test Data

Run: 1

Manufacturer: Hearth & Home
Model: Dauntless-CAT
Tracking No.: 2389
Project No.: 061WS104E
Test Date: 02-Oct-19
Beginning Clock Time: 12:54

Total Sampling Time: 186 min
Recording Interval: 1 min
Background Sample Volume: _____ cubic feet

Meter Box Y Factor: 0.992 (1) 0.989 (2) _____ (Amb)

Barometric Pressure:	Begin	Middle	End	Average
	29.34		29.47	29.41 0

OMNI Equipment Numbers: _____

PM Control Modules: 371, 372
Dilution Tunnel MW(dry): 29.00 lb/lb-mole
Dilution Tunnel MW(wet): 28.78 lb/lb-mole
Dilution Tunnel H2O: 2.00 percent
Dilution Tunnel Static: -0.285 "H2O
Tunnel Area: 0.19635 ft2
Pitot Tube Cp: 0.99

Avg. Tunnel Velocity: 19.28 ft/sec.
Initial Tunnel Flow: 211.9 scfm
Average Tunnel Flow: 207.9 scfm
Post-Test Leak Check (1): 0.000 cfm @ 8 in. Hg
Post-Test Leak Check (2): 0.000 cfm @ 13 in. Hg
Average Test Piece Fuel Moisture: 22.81 Dry Basis %

Technician Signature: _____

Velocity Traverse Data

	Pt.1	Pt.2	Pt.3	Pt.4	Pt.5	Pt.6	Pt.7	Pt.8	Center	
Initial dP	0.072	0.080	0.076	0.078	0.080	0.082	0.080	0.078	0.085	"H2O
Temp:	69	69	69	69	69	69	69	69	69	°F

V_{strav} 18.83 ft/sec V_{scent} 19.54 ft/sec F_p 0.964

	Particulate Sampling Data														Fuel Weight (lb)		Temperature Data (°F)													Stack Gas Data		
Elapsed Time (min)	Gas Meter 1 (ft^3)	Gas Meter 2 (ft^3)	Sample Rate 1 (cfm)	Sample Rate 2 (cfm)	Orifice dH 1 ("H_2O)	Meter 1 Temp (°F)	Meter 1 Vacuum ("Hg)	Orifice dH 2 ("H_2O)	Meter 2 Temp (°F)	Meter 2 Vacuum ("Hg)	Dilution Tunnel (°F)	Dilution Tunnel Center dP	Pro. Rate 1	Pro. Rate 2	Scale Reading	Weight Change	Firebox Top	Firebox Bottom	Firebox Back	Firebox Left	Firebox Right	Avg. Stove Surface	Catalyst Exit	Stack	Filter 1	Dryer Exit 1	Filter 2	Dryer Exit 2	Ambient	Draft ("H_2O)	CO_2 (%)	CO (%)
74	11.989	12.653	0.16	0.17	2.26	74	-0.01	1.79	73	-3.4	95	0.080	104	103	17.9	-0.15	325	233	216	214	215	241	1598	414	83	64	84	63	72	0.010	14.68	3
75	12.154	12.826	0.16	0.17	2.27	74	0.13	1.78	73	-3.2	95	0.090	98	97	17.7	-0.15	321	234	215	215	217	240	1595	414	83	64	83	63	72	-0.056	14.82	2.33
76	12.319	12.999	0.17	0.17	2.30	74	-0.03	1.79	73	-3.3	95	0.080	104	103	17.6	-0.15	318	234	214	217	220	241	1608	414	83	65	83	63	72	-0.057	14.83	2.32
77	12.485	13.173	0.17	0.17	2.29	74	-0.07	1.79	73	-3.2	95	0.090	99	98	17.4	-0.15	315	235	213	218	223	241	1604	415	83	65	83	63	72	-0.056	14.78	2.27
78	12.649	13.346	0.16	0.17	2.27	74	0.45	1.79	73	-3.2	95	0.090	98	97	17.3	-0.13	312	236	213	220	226	241	1605	415	82	65	83	63	72	-0.057	14.85	1.77
79	12.814	13.520	0.17	0.17	2.29	74	0.11	1.79	73	-3.4	95	0.090	98	98	17.2	-0.15	309	236	212	221	228	241	1605	416	82	65	83	63	73	-0.057	14.95	1.52
80	12.979	13.693	0.16	0.17	2.29	74	0.41	1.78	73	-3.2	95	0.090	98	97	17.0	-0.20	306	238	211	222	231	242	1605	417	82	65	83	63	72	-0.056	15	1.57
81	13.144	13.867	0.17	0.17	2.29	74	0.22	1.78	73	-3.3	95	0.080	104	104	16.8	-0.15	305	239	211	224	234	243	1603	418	82	65	83	63	73	-0.056	15.06	1.67
82	13.309	14.040	0.16	0.17	2.26	74	0.28	1.79	73	-3.5	95	0.080	104	103	16.6	-0.15	304	240	210	226	237	243	1605	417	82	65	83	63	72	-0.058	15.12	1.69
83	13.474	14.213	0.17	0.17	2.28	74	0.02	1.79	73	-3.2	95	0.080	104	103	16.5	-0.15	302	242	210	227	241	244	1606	419	83	65	83	63	73	-0.058	15.15	1.97
84	13.639	14.386	0.16	0.17	2.29	74	-0.06	1.79	73	-3.3	96	0.090	98	98	16.3	-0.20	301	243	209	229	244	245	1611	419	83	65	83	63	72	-0.058	15.09	2.36
85	13.804	14.560	0.17	0.17	2.29	74	0.39	1.80	73	-3.5	96	0.080	104	104	16.1	-0.15	299	244	209	230	248	246	1611	420	83	65	83	64	73	-0.058	15.12	2.41
86	13.968	14.733	0.16	0.17	2.28	74	0.13	1.80	73	-3.2	96	0.090	98	98	16.0	-0.13	298	246	209	231	251	247	1613	420	83	65	83	64	73	-0.058	15.07	2.57
87	14.133	14.906	0.16	0.17	2.29	74	0.12	1.78	73	-3.4	96	0.090	98	98	15.8	-0.20	298	247	208	232	255	248	1617	421	83	65	83	64	72	-0.058	15.07	2.72
88	14.298	15.080	0.17	0.17	2.29	74	-0.04	1.78	73	-3.4	96	0.080	104	104	15.7	-0.15	297	248	208	233	259	249	1615	421	83	65	83	64	73	-0.058	15.11	2.72
89	14.463	15.253	0.16	0.17	2.26	74	0.3	1.79	73	-3.2	96	0.090	98	98	15.5	-0.15	297	249	208	234	262	250	1617	421	83	65	83	64	73	-0.058	15.2	2.56
90	14.627	15.427	0.16	0.17	2.27	74	0.43	1.79	73	-3.2	96	0.090	98	98	15.3	-0.20	295	251	208	235	266	251	1611	421	83	66	83	64	73	-0.057	15.28	2.49
91	14.792	15.600	0.16	0.17	2.28	74	0.18	1.79	73	-3.3	96	0.080	104	103	15.1	-0.15	295	252	208	235	270	252	1616	421	82	66	83	64	73	-0.057	15.3	2.36
92	14.957	15.774	0.17	0.17	2.26	74	-0.04	1.79	73	-3.5	97	0.080	105	104	15.0	-0.15	295	253	208	236	273	253	1617	421	83	66	83	64	73	-0.058	15.42	1.9
93	15.121	15.947	0.16	0.17	2.26	74	0.25	1.79	73	-3.2	96	0.080	104	103	14.8	-0.15	295	255	208	237	276	254	1615	420	83	66	83	64	73	-0.058	15.35	2.24
94	15.285	16.120	0.16	0.17	2.27	74	0.17	1.79	73	-3.3	96	0.080	104	103	14.6	-0.20	296	256	209	237	280	256	1614	422	83	66	83	64	73	-0.058	15.28	2.51
95	15.450	16.293	0.16	0.17	2.27	75	0.36	1.79	73	-3.3	97	0.090	98	98	14.5	-0.13	296	257	209	238	283	257	1614	421	83	66	83	64	73	-0.057	15.26	2.63
96	15.615	16.467	0.17	0.17	2.26	75	-0.08	1.79	73	-3.4	96	0.090	98	98	14.4	-0.15	296	258	210	239	287	258	1616	420	83	66	83	64	73	-0.058	15.27	2.68
97	15.779	16.640	0.16	0.17	2.26	75	0.33	1.80	73	-3.2	96	0.090	98	98	14.2	-0.15	296	260	210	240	290	259	1618	420	83	66	83	64	73	-0.058	15.25	2.72
98	15.943	16.814	0.16	0.17	2.27	75	-0.1	1.79	73	-3.4	97	0.080	104	104	14.0	-0.20	296	261	210	240	294	260	1623	421	83	66	83	64	73	-0.058	15.28	2.71
99	16.108	16.987	0.17	0.17	2.27	75	0.42	1.79	73	-3.4	97	0.090	98	98	13.8	-0.15	297	263	211	241	297	262	1620	421	83	66	83	64	73	-0.058	15.31	2.6
100	16.272	17.161	0.16	0.17	2.25	75	0.23	1.78	73	-3.2	96	0.090	98	98	13.7	-0.15	298	264	211	240	300	263	1622	421	83	66	83	64	73	-0.058	15.36	2.49
101	16.435	17.334	0.16	0.17	2.26	75	0.18	1.79	73	-3.4	97	0.080	103	104	13.6	-0.13	299	265	212	241	303	264	1625	421	83	67	83	64	73	-0.058	15.36	2.47
102	16.600	17.507	0.17	0.17	2.26	75	0.44	1.79	73	-3.2	96	0.080	104	103	13.4	-0.15	300	267	213	242	307	266	1630	420	83	67	83	64	73	-0.058	15.37	2.42
103	16.764	17.680	0.16	0.17	2.25	75	0.2	1.79	73	-3.2	96	0.090	98	98	13.2	-0.15	300	268	213	243	309	267	1633	421	83	67	83	64	73	-0.057	15.44	2.24
104	16.928	17.854	0.16	0.17	2.25	75	0.21	1.79	73	-3.4	96	0.090	98	98	13.1	-0.15	301	269	214	244	312	268	1637	422	83	67	83	64	73	-0.058	15.5	1.91
105	17.092	18.027	0.16	0.17	2.26	75	0.19	1.79	73	-3.4	97	0.080	104	104	12.9	-0.15	302	271	214	244	316	269	1642	423	83	67	83	65	73	-0.058	15.55	1.67
106	17.257	18.201	0.17	0.17	2.23	75	0.38	1.79	73	-3.2	97	0.090	98	98	12.8	-0.15	302	271	215	244	319	270	1646	425	83	67	83	65	73	-0.058	15.58	1.73
107	17.420	18.374	0.16	0.17	2.25	75	0.23	1.79	73	-3.4	97	0.080	103	104	12.7	-0.13	303	272	216	245	321	271	1644	424	83	67	83	65	73	-0.058	15.56	1.96
108	17.584	18.548	0.16	0.17	2.26	75	0.43	1.78	73	-3.2	97	0.080	104	104	12.5	-0.15	305	274	216	246	324	273	1651	425	83	67	83	65	73	-0.058	15.51	2.07
109	17.748	18.721	0.16	0.17	2.27	75	-0.05	1.80	73	-3.3	97	0.080	104	104	12.3	-0.15	307	275	217	247	326	274	1652	426	83	67	83	65	73	-0.058	15.51	2.03
110	17.912	18.894	0.16	0.17	2.24	75	-0.03	1.79	73	-3.4	97	0.080	104	104	12.2	-0.15	308	276	218	248	329	276	1654	427	83	67	83	65	73	-0.058	15.56	1.87

Wood Heater Test Data

Run: 1

Manufacturer: Hearth & Home
Model: Dauntless-CAT
Tracking No.: 2389
Project No.: 061WS104E
Test Date: 02-Oct-19
Beginning Clock Time: 12:54

Total Sampling Time: 186 min
Recording Interval: 1 min
Background Sample Volume: _____ cubic feet

Meter Box Y Factor: 0.992 (1) 0.989 (2) _____ (Amb)

Barometric Pressure:	Begin	Middle	End	Average
	29.34		29.47	29.41 0

OMNI Equipment Numbers: _____

PM Control Modules: 371, 372
Dilution Tunnel MW(dry): 29.00 lb/lb-mole
Dilution Tunnel MW(wet): 28.78 lb/lb-mole
Dilution Tunnel H2O: 2.00 percent
Dilution Tunnel Static: -0.285 "H2O
Tunnel Area: 0.19635 ft2
Pitot Tube Cp: 0.99

Avg. Tunnel Velocity: 19.28 ft/sec.
Initial Tunnel Flow: 211.9 scfm
Average Tunnel Flow: 207.9 scfm
Post-Test Leak Check (1): 0.000 cfm @ 8 in. Hg
Post-Test Leak Check (2): 0.000 cfm @ 13 in. Hg
Average Test Piece Fuel Moisture: 22.81 Dry Basis %

Technician Signature: _____

Velocity Traverse Data

	Pt.1	Pt.2	Pt.3	Pt.4	Pt.5	Pt.6	Pt.7	Pt.8	Center	
Initial dP	0.072	0.080	0.076	0.078	0.080	0.082	0.080	0.078	0.085	"H2O
Temp:	69	69	69	69	69	69	69	69	69	°F

V_{strav} 18.83 ft/sec V_{scent} 19.54 ft/sec F_p 0.964

	Particulate Sampling Data														Fuel Weight (lb)		Temperature Data (°F)													Stack Gas Data		
Elapsed Time (min)	Gas Meter 1 (ft^3)	Gas Meter 2 (ft^3)	Sample Rate 1 (cfm)	Sample Rate 2 (cfm)	Orifice dH 1 ("H_2O)	Meter 1 Temp (°F)	Meter 1 Vacuum ("Hg)	Orifice dH 2 ("H_2O)	Meter 2 Temp (°F)	Meter 2 Vacuum ("Hg)	Dilution Tunnel (°F)	Dilution Tunnel Center dP	Pro. Rate 1	Pro. Rate 2	Scale Reading	Weight Change	Firebox Top	Firebox Bottom	Firebox Back	Firebox Left	Firebox Right	Avg. Stove Surface	Catalyst Exit	Stack	Filter 1	Dryer Exit 1	Filter 2	Dryer Exit 2	Ambient	Draft ("H_2O)	CO_2 (%)	CO (%)
111	18.076	19.068	0.16	0.17	2.25	75	0.04	1.78	73	-3.4	97	0.090	98	98	12.0	-0.15	309	277	219	248	332	277	1654	428	83	67	83	65	73	-0.058	15.65	1.49
112	18.240	19.241	0.16	0.17	2.26	75	0.03	1.79	73	-3.3	97	0.080	104	104	11.9	-0.09	311	278	220	249	334	278	1638	431	83	68	83	65	73	-0.058	15.69	1.16
113	18.404	19.414	0.16	0.17	2.26	75	0.11	1.80	73	-3.3	97	0.080	104	104	11.8	-0.15	312	279	221	251	336	280	1632	430	83	68	83	65	73	-0.058	15.75	0.82
114	18.568	19.588	0.16	0.17	2.25	75	0.38	1.79	73	-3.2	97	0.090	98	98	11.6	-0.15	315	280	222	252	339	282	1639	432	83	68	83	65	73	-0.057	15.69	0.52
115	18.732	19.761	0.16	0.17	2.25	75	0.28	1.79	73	-3.2	97	0.080	104	104	11.5	-0.13	317	281	224	253	341	283	1650	432	83	68	83	65	73	-0.058	15.63	0.52
116	18.897	19.935	0.16	0.17	2.23	75	0.25	1.79	73	-3.2	98	0.080	104	104	11.4	-0.11	319	282	225	254	343	285	1657	435	83	68	83	65	73	-0.058	15.64	0.48
117	19.060	20.108	0.16	0.17	2.25	75	0.41	1.80	73	-3.4	98	0.080	103	104	11.2	-0.15	321	283	227	254	345	286	1658	436	83	68	83	65	73	-0.058	15.73	0.48
118	19.223	20.281	0.16	0.17	2.26	75	0.08	1.79	73	-3.5	98	0.080	103	104	11.1	-0.15	323	285	228	256	348	288	1668	437	83	68	83	65	73	-0.058	15.72	0.39
119	19.388	20.455	0.17	0.17	2.26	75	-0.04	1.80	73	-3.3	98	0.090	98	98	11.0	-0.09	330	285	230	257	349	290	1619	435	83	68	83	65	73	-0.058	15.61	0.35
120	19.552	20.628	0.16	0.17	2.25	75	0.26	1.79	73	-3.3	98	0.090	98	98	10.8	-0.15	333	286	232	258	351	292	1653	435	83	68	83	65	74	-0.058	15.15	0.27
121	19.716	20.802	0.16	0.17	2.25	75	0.2	1.80	73	-3.4	98	0.080	104	104	10.7	-0.15	337	287	235	258	353	294	1664	434	83	68	83	65	74	-0.058	14.98	0.18
122	19.879	20.975	0.16	0.17	2.26	75	0.2	1.80	73	-3.3	98	0.080	103	104	10.6	-0.09	339	287	238	259	353	295	1663	435	83	68	83	65	74	-0.058	15.1	0.49
123	20.044	21.148	0.16	0.17	2.26	75	0.44	1.78	73	-3.3	98	0.080	104	104	10.4	-0.15	343	287	242	260	355	297	1662	436	83	68	83	65	74	-0.058	15.18	0.61
124	20.207	21.322	0.16	0.17	2.25	75	0.18	1.79	73	-3.5	98	0.080	103	104	10.3	-0.15	347	288	246	260	356	299	1658	436	83	68	83	65	74	-0.058	15.2	0.61
125	20.372	21.495	0.16	0.17	2.26	75	-0.09	1.80	73	-3.3	98	0.090	98	98	10.2	-0.09	351	289	251	261	357	302	1624	434	83	68	83	65	74	-0.057	15.35	0.72
126	20.537	21.669	0.16	0.17	2.24	75	0.44	1.80	73	-3.3	98	0.080	104	104	10.1	-0.11	354	289	255	261	358	303	1607	434	83	69	83	65	74	-0.058	15.29	0.54
127	20.700	21.842	0.16	0.17	2.23	75	-0.07	1.79	73	-3.2	98	0.090	97	98	9.9	-0.15	358	290	260	261	359	306	1605	434	83	69	83	65	74	-0.058	15.08	0.3
128	20.864	22.016	0.16	0.17	2.25	75	0.26	1.78	73	-3.2	98	0.080	104	104	9.9	-0.09	362	290	265	261	360	308	1608	434	83	69	83	65	74	-0.058	14.98	0.21
129	21.028	22.189	0.16	0.17	2.26	75	0.44	1.80	73	-3.2	98	0.090	98	98	9.7	-0.15	365	290	269	262	360	309	1591	432	83	69	83	66	74	-0.057	15.05	0.21
130	21.192	22.363	0.16	0.17	2.25	75	-0.1	1.78	73	-3.4	98	0.090	98	98	9.6	-0.11	370	290	274	261	360	311	1591	433	83	69	83	66	74	-0.058	15.04	0.16
131	21.356	22.536	0.16	0.17	2.26	75	0.07	1.78	73	-3.2	98	0.080	104	104	9.5	-0.13	374	290	278	262	362	313	1587	433	83	69	83	66	74	-0.057	15.02	0.11
132	21.520	22.710	0.16	0.17	2.26	75	0.28	1.79	73	-3.4	98	0.080	104	104	9.3	-0.11	378	290	283	261	362	315	1584	434	83	69	83	66	75	-0.058	15.18	0.11
133	21.684	22.883	0.16	0.17	2.25	75	0.18	1.80	73	-3.3	99	0.080	104	104	9.2	-0.15	383	290	288	261	362	317	1569	435	83	69	83	66	75	-0.058	15.02	0.11
134	21.848	23.057	0.16	0.17	2.25	75	0.13	1.79	72	-3.5	99	0.080	104	105	9.0	-0.15	388	291	293	260	362	319	1620	438	83	69	83	66	75	-0.058	15.07	0.11
135	22.012	23.230	0.16	0.17	2.25	75	0.1	1.78	72	-3.4	99	0.080	104	104	8.9	-0.13	392	291	298	261	363	321	1631	441	83	69	83	66	75	-0.058	15.5	0.3
136	22.176	23.404	0.16	0.17	2.24	75	-0.07	1.78	72	-3.3	99	0.090	98	99	8.8	-0.15	397	292	303	262	364	324	1623	442	83	69	83	66	75	-0.059	15.82	0.51
137	22.340	23.576	0.16	0.17	2.23	75	-0.04	1.79	72	-3.2	99	0.080	104	103	8.6	-0.11	401	292	308	263	364	326	1625	446	83	69	83	66	75	-0.060	15.87	0.55
138	22.503	23.750	0.16	0.17	2.25	75	0.31	1.79	72	-3.4	100	0.090	97	99	8.5	-0.15	414	293	314	264	365	330	1606	448	83	69	83	66	75	-0.059	15.87	0.54
139	22.667	23.923	0.16	0.17	2.25	75	-0.04	1.79	72	-3.3	100	0.080	104	104	8.4	-0.13	433	293	320	264	364	335	1559	450	83	69	83	66	75	-0.058	15.87	0.94
140	22.831	24.097	0.16	0.17	2.24	75	-0.02	1.78	72	-3.3	100	0.080	104	105	8.2	-0.11	449	294	327	264	364	340	1516	448	83	69	83	66	76	-0.059	15.77	0.75
141	22.994	24.270	0.16	0.17	2.25	75	-0.06	1.79	72	-3.4	100	0.080	103	104	8.1	-0.15	459	296	334	263	365	343	1481	444	83	69	83	66	76	-0.058	15.56	0.38
142	23.158	24.443	0.16	0.17	2.25	75	-0.1	1.79	72	-3.3	100	0.090	98	98	8.0	-0.13	463	298	340	262	364	345	1465	441	83	69	83	66	76	-0.058	15.16	0.2
143	23.322	24.617	0.16	0.17	2.25	75	0.07	1.78	72	-3.4	100	0.090	98	99	7.8	-0.15	466	299	346	260	364	347	1529	441	83	69	83	66	76	-0.059	14.78	0.11
144	23.485	24.790	0.16	0.17	2.24	75	-0.06	1.78	72	-3.2	100	0.090	97	98	7.7	-0.11	469	300	349	260	365	349	1605	443	84	69	83	66	76	-0.058	14.9	0.08
145	23.649	24.963	0.16	0.17	2.25	76	-0.07	1.80	72	-3.3	100	0.080	104	104	7.5	-0.15	471	302	351	259	364	349	1622	442	84	69	83	66	76	-0.059	15.61	0.5
146	23.813	25.137	0.16	0.17	2.25	75	-0.12	1.79	72	-3.3	100	0.090	98	99	7.4	-0.13	471	304	353	258	364	350	1632	443	84	69	83	66	76	-0.059	15.85	0.89
147	23.976	25.310	0.16	0.17	2.23	76	0.07	1.78	72	-3.4	100	0.080	103	104	7.3	-0.11	470	306	354	258	363	350	1610	441	84	69	83	66	76	-0.059	15.89	1.09

Wood Heater Test Data

Run: 1

Manufacturer: Hearth & Home
Model: Dauntless-CAT
Tracking No.: 2389
Project No.: 061WS104E
Test Date: 02-Oct-19
Beginning Clock Time: 12:54

Total Sampling Time: 186 min
Recording Interval: 1 min
Background Sample Volume: _____ cubic feet

Meter Box Y Factor: 0.992 (1) 0.989 (2) _____ (Amb)

Barometric Pressure:	Begin	Middle	End	Average
	29.34		29.47	29.41 0

OMNI Equipment Numbers: _____

PM Control Modules: 371, 372
Dilution Tunnel MW(dry): 29.00 lb/lb-mole
Dilution Tunnel MW(wet): 28.78 lb/lb-mole
Dilution Tunnel H2O: 2.00 percent
Dilution Tunnel Static: -0.285 "H2O
Tunnel Area: 0.19635 ft2
Pitot Tube Cp: 0.99

Avg. Tunnel Velocity: 19.28 ft/sec.
Initial Tunnel Flow: 211.9 scfm
Average Tunnel Flow: 207.9 scfm
Post-Test Leak Check (1): 0.000 cfm @ 8 in. Hg
Post-Test Leak Check (2): 0.000 cfm @ 13 in. Hg
Average Test Piece Fuel Moisture: 22.81 Dry Basis %

Technician Signature: _____

Velocity Traverse Data

	Pt.1	Pt.2	Pt.3	Pt.4	Pt.5	Pt.6	Pt.7	Pt.8	Center	
Initial dP	0.072	0.080	0.076	0.078	0.080	0.082	0.080	0.078	0.085	"H2O
Temp:	69	69	69	69	69	69	69	69	69	°F

V_{strav} 18.83 ft/sec V_{scent} 19.54 ft/sec F_p 0.964

	Particulate Sampling Data														Fuel Weight (lb)		Temperature Data (°F)													Stack Gas Data		
Elapsed Time (min)	Gas Meter 1 (ft^3)	Gas Meter 2 (ft^3)	Sample Rate 1 (cfm)	Sample Rate 2 (cfm)	Orifice dH 1 ("H_2O)	Meter 1 Temp (°F)	Meter 1 Vacuum ("Hg)	Orifice dH 2 ("H_2O)	Meter 2 Temp (°F)	Meter 2 Vacuum ("Hg)	Dilution Tunnel (°F)	Dilution Tunnel Center dP	Pro. Rate 1	Pro. Rate 2	Scale Reading	Weight Change	Firebox Top	Firebox Bottom	Firebox Back	Firebox Left	Firebox Right	Avg. Stove Surface	Catalyst Exit	Stack	Filter 1	Dryer Exit 1	Filter 2	Dryer Exit 2	Ambient	Draft ("H_2O)	CO_2 (%)	CO (%)
148	24.140	25.483	0.16	0.17	2.25	76	0.35	1.78	72	-3.4	100	0.080	104	104	7.1	-0.15	468	308	357	258	363	351	1593	441	83	69	83	66	76	-0.059	15.77	1.09
149	24.304	25.656	0.16	0.17	2.24	76	0.42	1.80	72	-3.4	99	0.090	98	98	7.1	-0.09	469	310	360	257	363	352	1585	440	83	69	83	66	76	-0.059	15.5	0.83
150	24.466	25.830	0.16	0.17	2.22	76	-0.12	1.78	72	-3.4	100	0.090	97	99	6.9	-0.15	469	310	364	256	362	352	1570	440	83	69	83	66	76	-0.059	15.4	0.69
151	24.629	26.003	0.16	0.17	2.23	76	0.37	1.78	72	-3.4	100	0.080	103	104	6.8	-0.11	473	311	368	256	360	354	1552	439	83	70	83	66	76	-0.059	15.4	0.57
152	24.793	26.176	0.16	0.17	2.23	76	-0.12	1.79	72	-3.5	100	0.090	98	98	6.7	-0.09	475	312	372	256	360	355	1545	437	83	70	83	66	77	-0.058	15.26	0.44
153	24.955	26.349	0.16	0.17	2.22	76	0.41	1.80	72	-3.2	100	0.090	97	98	6.6	-0.11	477	313	377	256	359	356	1531	437	84	70	83	66	77	-0.057	14.96	0.38
154	25.118	26.522	0.16	0.17	2.24	76	0.35	1.79	72	-3.4	100	0.090	97	98	6.5	-0.09	481	314	381	256	358	358	1528	434	84	70	83	66	76	-0.056	14.78	0.31
155	25.282	26.695	0.16	0.17	2.23	76	0.19	1.79	72	-3.2	100	0.080	104	104	6.5	0.00	482	314	384	255	358	359	1530	434	84	70	83	66	76	-0.056	14.6	0.27
156	25.445	26.869	0.16	0.17	2.23	76	-0.07	1.79	73	-3.4	100	0.080	103	104	6.3	-0.15	484	315	388	255	357	360	1536	434	84	70	83	66	76	-0.057	14.56	0.25
157	25.608	27.042	0.16	0.17	2.25	76	-0.13	1.80	72	-3.5	100	0.090	97	98	6.2	-0.11	487	315	392	254	357	361	1556	435	84	70	83	66	76	-0.058	14.64	0.27
158	25.773	27.216	0.16	0.17	2.24	76	0.19	1.79	73	-3.4	100	0.080	104	104	6.1	-0.13	490	316	396	254	357	363	1582	437	84	70	83	66	77	-0.058	14.82	0.34
159	25.935	27.389	0.16	0.17	2.23	76	0.41	1.79	72	-3.3	100	0.090	97	98	6.0	-0.11	494	317	399	255	358	365	1574	440	83	70	83	66	77	-0.058	15.11	0.66
160	26.098	27.563	0.16	0.17	2.24	76	0.08	1.79	72	-3.4	100	0.080	103	105	5.9	-0.09	496	317	404	255	356	366	1568	439	83	70	83	66	77	-0.058	15.3	0.72
161	26.263	27.736	0.17	0.17	2.24	76	-0.1	1.80	72	-3.5	100	0.080	104	104	5.8	-0.11	500	318	408	255	356	367	1563	440	83	70	83	66	77	-0.058	15.37	0.63
162	26.426	27.910	0.16	0.17	2.23	76	0.24	1.79	72	-3.4	100	0.080	103	105	5.7	-0.09	503	319	411	256	356	369	1543	440	84	70	83	66	77	-0.057	15.44	0.58
163	26.589	28.083	0.16	0.17	2.24	76	0.06	1.79	73	-3.2	100	0.080	103	104	5.6	-0.15	506	320	414	256	357	371	1524	438	84	70	83	66	77	-0.057	15.39	0.42
164	26.753	28.257	0.16	0.17	2.24	76	0.17	1.80	72	-3.4	100	0.080	104	105	5.5	-0.07	509	320	418	256	356	372	1515	437	84	70	83	66	77	-0.057	15.17	0.25
165	26.916	28.430	0.16	0.17	2.22	76	0.28	1.80	72	-3.4	100	0.080	103	104	5.4	-0.09	512	321	420	256	357	373	1507	436	84	70	83	66	78	-0.056	15	0.17
166	27.079	28.604	0.16	0.17	2.24	76	-0.07	1.79	73	-3.2	100	0.080	103	104	5.3	-0.11	513	322	422	256	357	374	1505	434	84	70	83	66	78	-0.057	14.84	0.13
167	27.243	28.777	0.16	0.17	2.25	76	0.11	1.78	72	-3.4	100	0.080	104	104	5.2	-0.13	516	322	424	255	357	375	1504	434	84	70	83	66	78	-0.057	14.72	0.1
168	27.406	28.951	0.16	0.17	2.23	76	-0.09	1.78	73	-3.2	100	0.080	103	104	5.0	-0.11	522	323	426	255	357	377	1505	435	84	70	83	66	78	-0.056	14.63	0.1
169	27.569	29.124	0.16	0.17	2.23	76	0.16	1.79	72	-3.3	99	0.080	103	104	4.9	-0.11	532	324	429	255	358	380	1491	436	83	70	83	66	78	-0.057	14.69	0.11
170	27.732	29.297	0.16	0.17	2.25	76	0.15	1.80	72	-3.2	99	0.080	103	104	4.9	-0.09	539	326	431	255	359	382	1450	435	83	70	83	66	78	-0.057	15	0.17
171	27.896	29.471	0.16	0.17	2.23	76	-0.03	1.79	73	-3.3	100	0.080	104	104	4.8	-0.04	540	327	433	254	358	382	1417	431	84	70	83	66	78	-0.056	14.68	0.1
172	28.059	29.644	0.16	0.17	2.23	76	0.13	1.78	72	-3.2	99	0.080	103	104	4.7	-0.15	541	329	435	253	359	383	1405	428	84	70	83	66	78	-0.056	14.12	0.04
173	28.222	29.818	0.16	0.17	2.25	76	-0.13	1.80	73	-3.2	99	0.080	103	104	4.6	-0.04	541	330	437	252	359	384	1400	425	84	70	83	66	78	-0.056	13.78	0.01
174	28.386	29.991	0.16	0.17	2.23	76	-0.08	1.79	73	-3.2	98	0.080	104	104	4.5	-0.07	540	331	438	251	358	384	1408	424	84	70	83	66	78	-0.056	13.56	0.01
175	28.549	30.165	0.16	0.17	2.24	76	-0.13	1.79	73	-3.3	98	0.080	103	104	4.4	-0.13	538	332	439	247	357	383	1412	421	84	70	83	66	78	-0.056	13.5	0.01
176	28.713	30.338	0.16	0.17	2.24	76	0.23	1.80	73	-3.2	98	0.080	104	104	4.3	-0.07	537	333	441	246	357	383	1418	420	84	70	83	66	78	-0.056	13.57	0.01
177	28.877	30.511	0.16	0.17	2.24	76	0.41	1.80	73	-3.3	98	0.090	98	98	4.3	-0.09	537	333	442	244	356	382	1421	420	83	70	83	66	79	-0.056	13.56	0.01
178	29.040	30.685	0.16	0.17	2.24	76	0.4	1.79	73	-3.3	97	0.090	97	98	4.1	-0.11	536	333	442	244	356	382	1425	420	83	70	83	66	79	-0.056	13.52	0.01
179	29.204	30.858	0.16	0.17	2.24	76	0.19	1.78	73	-3.4	98	0.090	98	98	4.1	-0.04	535	333	444	243	355	382	1424	419	83	70	83	66	79	-0.055	13.53	0.02
180	29.367	31.032	0.16	0.17	2.24	76	-0.14	1.79	73	-3.4	98	0.090	97	98	4.0	-0.11	534	334	444	242	354	382	1421	418	83	70	83	66	79	-0.055	13.53	0.02
181	29.530	31.205	0.16	0.17	2.24	76	0.14	1.80	73	-3.4	98	0.080	103	104	3.9	-0.04	534	334	445	241	355	382	1414	416	83	70	83	66	79	-0.055	13.53	0.02
182	29.694	31.378	0.16	0.17	2.25	76	-0.09	1.80	73	-3.5	97	0.080	104	104	3.9	-0.09	533	334	445	241	355	382	1410	417	83	70	83	66	79	-0.055	13.54	0.01
183	29.858	31.552	0.16	0.17	2.25	76	0.35	1.79	73	-3.2	97	0.090	98	98	3.7	-0.11	532	335	446	240	355	382	1405	416	83	70	83	66	79	-0.055	13.52	0.01
184	30.021	31.725	0.16	0.17	2.23	76	-0.13	1.80	73	-3.4	98	0.090	97	98	3.7	-0.04	533	335	446	239	354	381	1408	414	84	70	83	66	79	-0.055	13.52	0

Wood Heater Test Data

Run: 1

Manufacturer: Hearth & Home
Model: Dauntless-CAT
Tracking No.: 2389
Project No.: 061WS104E
Test Date: 02-Oct-19
Beginning Clock Time: 12:54

Total Sampling Time: 186 min
Recording Interval: 1 min
Background Sample Volume: _____ cubic feet

Meter Box Y Factor: 0.992 (1) 0.989 (2) _____ (Amb)

Barometric Pressure:	Begin	Middle	End	Average
	29.34		29.47	29.41 0

OMNI Equipment Numbers: _____

PM Control Modules: 371, 372
Dilution Tunnel MW(dry): 29.00 lb/lb-mole
Dilution Tunnel MW(wet): 28.78 lb/lb-mole
Dilution Tunnel H2O: 2.00 percent
Dilution Tunnel Static: -0.285 "H2O
Tunnel Area: 0.19635 ft2
Pitot Tube Cp: 0.99

Avg. Tunnel Velocity: 19.28 ft/sec.
Initial Tunnel Flow: 211.9 scfm
Average Tunnel Flow: 207.9 scfm
Post-Test Leak Check (1): 0.000 cfm @ 8 in. Hg
Post-Test Leak Check (2): 0.000 cfm @ 13 in. Hg
Average Test Piece Fuel Moisture: 22.81 Dry Basis %

Technician Signature: _____

Velocity Traverse Data

	Pt.1	Pt.2	Pt.3	Pt.4	Pt.5	Pt.6	Pt.7	Pt.8	Center	
Initial dP	0.072	0.080	0.076	0.078	0.080	0.082	0.080	0.078	0.085	"H2O
Temp:	69	69	69	69	69	69	69	69	69	°F

V_{strav} 18.83 ft/sec V_{scent} 19.54 ft/sec F_p 0.964

	Particulate Sampling Data														Fuel Weight (lb)		Temperature Data (°F)													Stack Gas Data		
Elapsed Time (min)	Gas Meter 1 (ft^3)	Gas Meter 2 (ft^3)	Sample Rate 1 (cfm)	Sample Rate 2 (cfm)	Orifice dH 1 ("H_2O)	Meter 1 Temp (°F)	Meter 1 Vacuum ("Hg)	Orifice dH 2 ("H_2O)	Meter 2 Temp (°F)	Meter 2 Vacuum ("Hg)	Dilution Tunnel (°F)	Dilution Tunnel Center dP	Pro. Rate 1	Pro. Rate 2	Scale Reading	Weight Change	Firebox Top	Firebox Bottom	Firebox Back	Firebox Left	Firebox Right	Avg. Stove Surface	Catalyst Exit	Stack	Filter 1	Dryer Exit 1	Filter 2	Dryer Exit 2	Ambient	Draft ("H_2O)	CO_2 (%)	CO (%)
185	30.184	31.899	0.16	0.17	2.24	76	0.4	1.79	73	-3.4	97	0.090	97	98	3.6	-0.11	533	335	447	238	354	381	1404	415	83	70	83	66	79	-0.055	13.52	0
186	30.349	32.072	0.16	0.17	2.25	76	-0.14	1.80	73	-3.5	97	0.090	98	98	3.6	0.00	533	335	447	238	354	381	1398	415	83	70	83	66	79	-0.054	13.51	0
Avg/Tot	30.349	32.072	0.16	0.17	2.24	74		1.78	72		95	0.085	100	100								310.4				65	83	63	73	-0.030		

Wood Heater Lab Data - ASTM E2780 / ASTM E2515

Manufacturer: Hearth & Home
Model: Dauntless-CAT
Tracking No.: 2389
Project No.: 061WS104E
Run #: 1
Date: 10/2/19

Equipment Numbers:

TRAIN 1 (First Hour emissions)

Sample Component	Reagent	Filter, Probe or Dish #	Weights		
			Final, mg	Tare, mg	Particulate, mg
B. Front filter catch	Filter	T179S	92.6	86.1	6.5
C. Rear filter catch	Filter				0.0
D. Probe catch*	Probe				0.0
E. Filter seals catch*	Seals				0.0

Sub-Total Total Particulate, mg: 6.5

TRAIN 1 (Post First Hour Change-out)

Sample Component	Reagent	Filter, Probe or Dish #	Weights		
			Final, mg	Tare, mg	Particulate, mg
B. Front filter catch	Filter	T200AP	182.0	179.1	2.9
C. Rear filter catch	Filter				0.0
D. Probe catch*	Probe	2	115016.6	115016.0	0.6
E. Filter seals catch*	Seals	R881	3513.6	3513.6	0.0

Sub-Total Total Particulate, mg: 3.5

Train 1 Aggregate Total Particulate, mg: **10.0**

TRAIN 2

Sample Component	Reagent	Filter, Probe or Dish #	Weights		
			Final, mg	Tare, mg	Particulate, mg
A. Front filter catch	Filter	T200BP	188.8	180.1	8.7
B. Rear filter catch	Filter	T180S	88.0	86.7	1.3
C. Probe catch*	Probe	6	115350.0	115349.3	0.7
D. Filter seals catch*	Seals	R882	4282.3	4281.8	0.5

Total Particulate, mg: **11.2**

AMBIENT

Sample Component	Reagent	Filter # or Probe #	Weights		
			Final, mg	Tare, mg	Particulate, mg
A. Front filter catch*	Filter				0.0

Total Particulate, mg: **0.0**

*Particulate catch that results in a negative number, is assumed to be zero for probes and seals, negative numbers for filters are assumed to be part of the seal weight.

Component	Equations:
A. Front filter catch	Final (mg) - Tare (mg) = Particulate, mg
B. Rear filter catch	Final (mg) - Tare (mg) = Particulate, mg
C. Probe catch	Final (mg) - Tare (mg) = Particulate, mg

Technician Signature:

Wood Heater Test Results - ASTM E2780 / ASTM E2515

Manufacturer: Hearth & Home
Model: Dauntless-CAT
Project No.: 061WS104E
Tracking No.: 2389
Run: 1
Test Date: 10/02/19

Burn Rate	**2.78**	**kg/hr dry**
Average Tunnel Temperature	95	degrees Fahrenheit
Average Gas Velocity in Dilution Tunnel - vs	19.28	feet/second
Average Gas Flow Rate in Dilution Tunnel - Qsd	12475.4	dscf/hour
Average Delta p	0.085	inches H20
Total Time of Test	186	minutes

	AMBIENT		SAMPLE TRAIN 1		SAMPLE TRAIN 2		FIRST HOUR FILTER (TRAIN 1)	
Total Sample Volume - Vm	0.000	cubic feet	30.349	cubic feet	32.072	cubic feet	9.695	cubic feet
Average Gas Meter Temperature	73	degrees Fahrenheit	74	degrees Fahrenheit	72	degrees Fahrenheit	73	degrees Fahrenheit
Total Sample Volume (Standard Conditions) - Vmstd	0.000	dscf	29.387	dscf	31.037	dscf	9.412	dscf
Total Particulates - m_n	0	mg	10	mg	11.2	mg	6.5	mg
Particulate Concentration (dry-standard) - C_r/C_s	0.000000	grams/dscf	0.00034	grams/dscf	0.00036	grams/dscf	0.00069	grams/dscf
Total Particulate Emissions - E_T	0.00	grams	13.16	grams	13.96	grams	8.62	grams
Particulate Emission Rate	0.00	grams/hour	4.25	grams/hour	4.50	grams/hour	8.62	grams/hour
Emissions Factor			1.53	g/kg	1.62	g/kg	-1.40	g/kg
Difference from Average Total Particulate Emissions			0.40	grams	0.40	grams		

Dual Train Comparison Results Are Acceptable

	FINAL AVERAGE RESULTS	
Complete Test Run		
Total Particulate Emissions - E_T	13.56	grams
Particulate Emission Rate	**4.37**	**grams/hour**
Emissions Factor	1.57	grams/kg
First Hour Emissions		
Total Particulate Emissions - E_T	8.62	grams
Particulate Emission Rate	8.62	grams/hour
Emissions Factor	-1.40	grams/kg
7.5% of Average Total Particulate Emissions	1.02	grams

	QUALITY CHECKS
Filter Temps < 90 °F	OK
Filter Face Velocity (47 mm)	OK
Dryer Exit Temp < 80F	OK
Leakage Rate	OK
Ambient Temp (55-90°F)	OK
Negative Probe Weight Eval.	OK
Pro-Rate Variation	OK

Technician Signature: _____

Adjunct to ASTM E XXXX Wood Heater Cordwood Test Method - May 10, 2017 Version
Cordwood Fuel Load Calculators - 10 lb/ft^3 Nominal Load Density
Core 45-65% of Total Load Weight, Remainder 35-55% of Total Load Weight
Values to be input manually

THIS DOCUMENT IS NOT AN ASTM STANDARD; IT IS UNDER CONSIDERATION WITHIN AN ASTM TECHNICAL COMMITTEE BUT HAS NOT RECEIVED ALL APPROVALS REQUIRED TO BECOME AN ASTM STANDARD. IT SHALL NOT BE REPRODUCED OR CIRCULATED OR QUOTED, IN WHOLE OR IN PART, OUTSIDE OF ASTM COMMITTEE ACTIVITIES EXCEPT WITH THE APPROVAL OF THE CHAIRMAN OF THE COMMITTEE HAVING JURISDICTION AND THE PRESIDENT OF THE SOCIETY. *COPYRIGHT ASTM, 100 BARR HARBOR DRIVE, WEST CONSHOHOCKEN, PA 19428. ALL RIGHTS RESERVED.*

For All Usable Firebox Volumes - High Fire Test Only

Nominal Required Load Density (wet basis)	10	lb/ft^3			
Usable Firebox Volume	1.82	ft^3			
Total Nom. Load Wt. Target	18.20	lb			
Total Load Wt. Allowable Range	17.30	to	19.10	lb	
Core Target Wt. Allowable Range	8.20	to	11.80	lb	
Remainder Load Wt. Allowable Range	6.40	to	10.00	lb	
					Mid-Point
Core Load Pc. Wt. Allowable Range	2.70	to	4.60	lb	3.65
Remainder Load Pc. Wt. Allowable Range	1.80	to	10.00	lb	5.90
	Pc. #				
Core Load Piece Wt. Actual	1	3.95	lb	In Range	
	2	3.99	lb	In Range	
	3	3.58	lb	In Range	
Core Load Total. Wt. Actual		11.52	lb	In Range	
	Pc. #				
Remainder Load Piece Wt.	1	3.11	lb	In Range	
(1 to 3 Pcs.)	2	3.64	lb	In Range	
	3		lb	NA	
Remainder Load Tot. Wt. Act		6.75	lb	In Range	
Total Load Wt. Actual		18.27	lb	In Range	
Core % of Total Wt.		63%		In Range	45-65%
Remainder % of Total Wt.		37%		In Range	35-55%
Actual Load % of Nominal Target		100%		In Range	95-105%
Actual Fuel Load Density		10.0	lb/ft^3		
Kindling and Start-up Fuel					
Maximim Kindling Wt. (20% of Tot. Load Wt.)		3.65	lb		
Actual Kindling Wt.		3.60	lb	In Range	19.7%
Maximum Start-up Fuel Wt. (30% of Tot. Load Wt.)		5.48	lb		
Actual Start-up Fuel Wt.		5.47	lb	In Range	29.9%
Allowable Residual Start-up Fuel Wt. Range	1.8	to	3.7	lb	Mid-Point
Actual Residual Start-up Fuel Wt.		2	lb	In Range	2.7
Total Wt. All Fuel Added (wet basis)		27.34	lb		
High Fire Test Run End Point Range	Low		High		Mid-Point
Based on Fuel Load Wt. (w/tares)	1.6	to	2.0	lb	1.8
Actual Fuel Load Ending Wt.		1.7	lb	In Range	

Fuel Piece Moisture Reading (%-dry basis)							
1	2	3	Ave.		Pc. Wt. Dry Basis		
22	21.2	24.2	22.5	In Range	3.23 lb	1.46	kg
19.2	22.7	21.8	21.2	In Range	3.29 lb	1.49	kg
24.5	22.2	24.3	23.7	In Range	2.89 lb	1.31	kg
24.6	25	24.8	24.8	In Range	2.49 lb	1.13	kg
24.2	19	18.8	20.7	In Range	3.02 lb	1.37	kg
			NA	NA	NA lb	NA	kg
Total Load Ave. MC (%-dry basis)			22.5	In Range			
Total Load Ave. MC % (wet basis)			18.3				
Total Test Load Weight (dry basis) →					14.92 lb	6.77	kg
Kindling Moisture (%-dry basis)							
10	10	10	10.0	In Range	3.27 lb	1.48	kg
Start-up Fuel Moisture Readings (%-dry basis)							
20.67	20.67	20.67	20.7	In Range	4.53 lb	2.06	kg
Total Wt. All Fuel Added (dry basis) →					22.73 lb	10.31	kg
Total Wt. All Fuel Burned (dry basis) →					19.0 lb	8.6	kg

OMNI-Test Laboratories, Inc.

Wood Heater Run Sheets

Client: Hearth & Home Project Number: 0061WS104E Run Number: 1
Model: Dauntless-Flexburn CAT Tracking Number: 2389 Date: 10/2/19
Test Crew: D Dans
OMNI Equipment ID numbers:

Wood Heater Supplemental Data

Start Time: 12:54 Booth #: N/A
Stop Time: 16:00

Stack Gas Leak Check:
Initial: good Final: good

Sample Train Leak Check:
A: 0.0 @ 8 "Hg
B: 0.0 @ 13 "Hg

Calibrations: Span Gas CO_2: 15.0 CO: 2.0

	Pre Test		Post Test	
	Zero	Span	Zero	Span
Time	1514	1514	See Run 2	
CO_2	-0.00	15.01		
CO	-0.00	2.00		

Air Velocity (ft/min): Initial: <50 Final: <50
Scale Audit (lbs): Initial: 10.0 Final: 10.0
Pitot Tube Leak Test: Initial: good Final: good
Stack Diameter (in): 6"
Induced Draft: 0.0
% Smoke Capture: 100 %
Flue Pipe Cleaned Prior to First Test in Series:
Date: ~~11/30/19~~ 9/30/19 Initials: BL

	Initial	Middle	Ending
P_b (in/Hg)	29.34		29.47
RH (%)	61		55
Ambient (°F)	68		79

Tunnel Traverse

Microtector Reading	dP (in H_2O)	T(°F)
	.072	69
	.080	69
	.076	69
	.078	69
	.080	69
	.082	69
	.080	69
	.078	69
Center:		
	.085	69

Background Filter Volume: N/A

Tunnel Static Pressure (in H_2O):	
Beginning of Test	End of Test
-.285	-.285

Technician Signature: [signature] Date: 10/3/19

OMNI-Test Laboratories, Inc.

Wood Heater Run Sheets

Client: Hearth & Home Project Number: 0061WS104E Run Number: 1
Model: Dauntless-Flexburn CAT Tracking Number: 2389 Date: 10/2/19
Test Crew: B G Adams
OMNI Equipment ID numbers:

Wood Heater Run Notes

Air Control Settings

Primary:

Fully open

Secondary: fixed

Tertiary/Pilot: N/A

Fan: On High

Preburn Notes

Time	Notes
0	Torch used for 15 seconds, door open until 200, then closed, bypass open until 0, then closed. Comb Air fully open entire test. Fan on High.
165	~~63~~ Added startup fuel. took 30 seconds to load. Bypass closed At 20 lbs loaded fuel load, 20 lbs not tared.

Test Notes

Sketch test fuel configuration:

See photo

Start up procedures & Timeline:

Bypass: Not used
Fuel loaded by: 30 seconds
Door closed at: 40 seconds
Primary air: At full high entire test

Notes: Fan on high entire test

Time	Notes
60	Changed front filter in train A
63	Changed front filter in train B

Technician Signature: B G Adams Date: 10/31/19

Run 1

High Burn 10-minute data

Efficiency and Heat Output Results
Kindling and start-up fuel removed from calculations

Wood Heater Test Data

Run: 1

Manufacturer: Hearth & Home
Model: Dauntless-CAT
Tracking No.: 2389
Project No.: 061WS104E
Test Date: 02-Oct-19
Beginning Clock Time: 15:54

Total Sampling Time: 125 min
Recording Interval: 1 min
Background Sample Volume: _____ cubic feet

Meter Box Y Factor: 0.992 (1) 0.989 (2) _____ (Amb)

Barometric Pressure:	Begin	Middle	End	Average
	29.34		29.47	29.41 0

OMNI Equipment Numbers: _____

PM Control Modules: 371, 372
Dilution Tunnel MW(dry): 29.00 lb/lb-mole
Dilution Tunnel MW(wet): 28.78 lb/lb-mole
Dilution Tunnel H2O: 2.00 percent
Dilution Tunnel Static: -0.285 "H2O
Tunnel Area: 0.19635 ft2
Pitot Tube Cp: 0.99

Avg. Tunnel Velocity: #DIV/0! ft/sec.
Initial Tunnel Flow: #DIV/0! scfm
Average Tunnel Flow: #DIV/0! scfm
Post-Test Leak Check (1): _____ cfm @ _____ in. Hg
Post-Test Leak Check (2): _____ cfm @ _____ in. Hg
Average Test Piece Fuel Moisture: 22.81 Dry Basis %

Technician Signature: _____

Velocity Traverse Data

	Pt.1	Pt.2	Pt.3	Pt.4	Pt.5	Pt.6	Pt.7	Pt.8	Center	
Initial dP										"H2O
Temp:										°F

V_{strav} _____ ft/sec V_{scent} _____ ft/sec F_p _____

	Particulate Sampling Data														Fuel Weight (lb)		Temperature Data (°F)													Stack Gas Data		
Elapsed Time (min)	Gas Meter 1 (ft^3)	Gas Meter 2 (ft^3)	Sample Rate 1 (cfm)	Sample Rate 2 (cfm)	Orifice dH 1 ("H_2O)	Meter 1 Temp (°F)	Meter 1 Vacuum ("Hg)	Orifice dH 2 ("H_2O)	Meter 2 Temp (°F)	Meter 2 Vacuum ("Hg)	Dilution Tunnel (°F)	Dilution Tunnel Center dP	Pro. Rate 1	Pro. Rate 2	Scale Reading	Weight Change	Firebox Top	Firebox Bottom	Firebox Back	Firebox Left	Firebox Right	Avg. Stove Surface	Catalyst Exit	Stack	Filter 1	Dryer Exit 1	Filter 2	Dryer Exit 2	Ambient	Draft ("H_2O)	CO_2 (%)	CO (%)
0															16.7		430	223	221	190	184	250	1086	369	82	64	83	62	72	0.012	10.3	0.26
1			0.00										#DIV/0!		16.4	-0.23	432	227	224	191	186	252	1081	369	81	64	83	62	72	0.012	10.12	0.3
2			0.00										#DIV/0!		16.2	-0.20	423	231	225	186	189	251	1286	352	82	64	83	62	72	0.011	10.19	0.31
3			0.00										#DIV/0!		16.1	-0.15	407	233	224	186	191	248	1518	380	82	64	83	62	72	0.011	7.13	0.54
4			0.00										#DIV/0!		16.0	-0.13	393	234	223	188	194	246	1570	396	82	64	83	62	72	0.011	11.67	3.25
5			0.00										#DIV/0!		15.8	-0.20	382	234	223	189	196	245	1581	403	82	64	83	62	72	0.011	13.75	3.03
6			0.00										#DIV/0!		15.6	-0.15	372	234	222	189	199	243	1590	409	82	64	83	62	72	0.011	14.68	2.57
7			0.00										#DIV/0!		15.4	-0.20	362	233	221	193	201	242	1591	411	82	64	83	62	72	0.011	14.88	2.59
8			0.00										#DIV/0!		15.2	-0.15	354	233	220	198	204	242	1583	412	82	64	83	62	72	0.011	14.9	2.74
9			0.00										#DIV/0!		15.1	-0.20	347	233	219	202	206	241	1566	414	82	64	83	62	72	0.011	14.84	2.96
10			0.00										#DIV/0!		14.9	-0.15	341	233	219	205	208	241	1561	414	82	64	84	62	72	0.011	14.61	3.64
11			0.00										#DIV/0!		14.7	-0.15	335	233	218	208	211	241	1588	414	82	64	84	63	72	0.011	14.5	4
12			0.00										#DIV/0!		14.5	-0.20	330	233	217	210	213	241	1597	414	82	64	84	63	72	0.011	14.49	3.82
13			0.00										#DIV/0!		14.5	-0.09	325	233	216	214	215	241	1598	414	83	64	84	63	72	0.010	14.68	3
14			0.00										#DIV/0!		14.3	-0.15	321	234	215	215	217	240	1595	414	83	64	83	63	72	-0.056	14.82	2.33
15			0.00										#DIV/0!		14.1	-0.15	318	234	214	217	220	241	1608	414	83	65	83	63	72	-0.057	14.83	2.32
16			0.00										#DIV/0!		14.0	-0.15	315	235	213	218	223	241	1604	415	83	65	83	63	72	-0.056	14.78	2.27
17			0.00										#DIV/0!		13.8	-0.15	312	236	213	220	226	241	1605	415	82	65	83	63	72	-0.057	14.85	1.77
18			0.00										#DIV/0!		13.7	-0.13	309	236	212	221	228	241	1605	416	82	65	83	63	73	-0.057	14.95	1.52
19			0.00										#DIV/0!		13.6	-0.15	306	238	211	222	231	242	1605	417	82	65	83	63	72	-0.056	15	1.57
20			0.00										#DIV/0!		13.4	-0.20	305	239	211	224	234	243	1603	418	82	65	83	63	73	-0.056	15.06	1.67
21			0.00										#DIV/0!		13.2	-0.15	304	240	210	226	237	243	1605	417	82	65	83	63	72	-0.058	15.12	1.69
22			0.00										#DIV/0!		13.0	-0.15	302	242	210	227	241	244	1606	419	83	65	83	63	73	-0.058	15.15	1.97
23			0.00										#DIV/0!		12.9	-0.15	301	243	209	229	244	245	1611	419	83	65	83	63	72	-0.058	15.09	2.36
24			0.00										#DIV/0!		12.7	-0.20	299	244	209	230	248	246	1611	420	83	65	83	64	73	-0.058	15.12	2.41
25			0.00										#DIV/0!		12.5	-0.15	298	246	209	231	251	247	1613	420	83	65	83	64	73	-0.058	15.07	2.57
26			0.00										#DIV/0!		12.4	-0.13	298	247	208	232	255	248	1617	421	83	65	83	64	72	-0.058	15.07	2.72
27			0.00										#DIV/0!		12.2	-0.20	297	248	208	233	259	249	1615	421	83	65	83	64	73	-0.058	15.11	2.72
28			0.00										#DIV/0!		12.1	-0.15	297	249	208	234	262	250	1617	421	83	65	83	64	73	-0.058	15.2	2.56
29			0.00										#DIV/0!		11.9	-0.15	295	251	208	235	266	251	1611	421	83	66	83	64	73	-0.057	15.28	2.49
30			0.00										#DIV/0!		11.7	-0.20	295	252	208	235	270	252	1616	421	82	66	83	64	73	-0.057	15.3	2.36
31			0.00										#DIV/0!		11.5	-0.15	295	253	208	236	273	253	1617	421	83	66	83	64	73	-0.058	15.42	1.9
32			0.00										#DIV/0!		11.4	-0.15	295	255	208	237	276	254	1615	420	83	66	83	64	73	-0.058	15.35	2.24
33			0.00										#DIV/0!		11.2	-0.15	296	256	209	237	280	256	1614	422	83	66	83	64	73	-0.058	15.28	2.51
34			0.00										#DIV/0!		11.0	-0.20	296	257	209	238	283	257	1614	421	83	66	83	64	73	-0.057	15.26	2.63
35			0.00										#DIV/0!		10.9	-0.13	296	258	210	239	287	258	1616	420	83	66	83	64	73	-0.058	15.27	2.68
36			0.00										#DIV/0!		10.8	-0.15	296	260	210	240	290	259	1618	420	83	66	83	64	73	-0.058	15.25	2.72

Wood Heater Test Data

Run: 1

Manufacturer: Hearth & Home
Model: Dauntless-CAT
Tracking No.: 2389
Project No.: 061WS104E
Test Date: 02-Oct-19
Beginning Clock Time: 15:54

Total Sampling Time: 125 min
Recording Interval: 1 min
Background Sample Volume: _____ cubic feet

Meter Box Y Factor: 0.992 (1) 0.989 (2) _____ (Amb)

Barometric Pressure:	Begin	Middle	End	Average
	29.34		29.47	29.41 0

OMNI Equipment Numbers: _____

PM Control Modules: 371, 372
Dilution Tunnel MW(dry): 29.00 lb/lb-mole
Dilution Tunnel MW(wet): 28.78 lb/lb-mole
Dilution Tunnel H2O: 2.00 percent
Dilution Tunnel Static: -0.285 "H2O
Tunnel Area: 0.19635 ft2
Pitot Tube Cp: 0.99

Avg. Tunnel Velocity: #DIV/0! ft/sec.
Initial Tunnel Flow: #DIV/0! scfm
Average Tunnel Flow: #DIV/0! scfm
Post-Test Leak Check (1): _____ cfm @ _____ in. Hg
Post-Test Leak Check (2): _____ cfm @ _____ in. Hg
Average Test Piece Fuel Moisture: 22.81 Dry Basis %

Technician Signature: _____

Velocity Traverse Data

	Pt.1	Pt.2	Pt.3	Pt.4	Pt.5	Pt.6	Pt.7	Pt.8	Center	
Initial dP										"H2O
Temp:										°F

V_{strav} _____ ft/sec V_{scent} _____ ft/sec F_p _____

	Particulate Sampling Data														Fuel Weight (lb)		Temperature Data (°F)													Stack Gas Data		
Elapsed Time (min)	Gas Meter 1 (ft^3)	Gas Meter 2 (ft^3)	Sample Rate 1 (cfm)	Sample Rate 2 (cfm)	Orifice dH 1 ("H_2O)	Meter 1 Temp (°F)	Meter 1 Vacuum ("Hg)	Orifice dH 2 ("H_2O)	Meter 2 Temp (°F)	Meter 2 Vacuum ("Hg)	Dilution Tunnel (°F)	Dilution Tunnel Center dP	Pro. Rate 1	Pro. Rate 2	Scale Reading	Weight Change	Firebox Top	Firebox Bottom	Firebox Back	Firebox Left	Firebox Right	Avg. Stove Surface	Catalyst Exit	Stack	Filter 1	Dryer Exit 1	Filter 2	Dryer Exit 2	Ambient	Draft ("H_2O)	CO_2 (%)	CO (%)
37			0.00										#DIV/0!		10.6	-0.15	296	261	210	240	294	260	1623	421	83	66	83	64	73	-0.058	15.28	2.71
38			0.00										#DIV/0!		10.4	-0.20	297	263	211	241	297	262	1620	421	83	66	83	64	73	-0.058	15.31	2.6
39			0.00										#DIV/0!		10.2	-0.15	298	264	211	240	300	263	1622	421	83	66	83	64	73	-0.058	15.36	2.49
40			0.00										#DIV/0!		10.1	-0.15	299	265	212	241	303	264	1625	421	83	67	83	64	73	-0.058	15.36	2.47
41			0.00										#DIV/0!		10.0	-0.13	300	267	213	242	307	266	1630	420	83	67	83	64	73	-0.058	15.37	2.42
42			0.00										#DIV/0!		9.8	-0.15	300	268	213	243	309	267	1633	421	83	67	83	64	73	-0.057	15.44	2.24
43			0.00										#DIV/0!		9.6	-0.15	301	269	214	244	312	268	1637	422	83	67	83	64	73	-0.058	15.5	1.91
44			0.00										#DIV/0!		9.5	-0.15	302	271	214	244	316	269	1642	423	83	67	83	65	73	-0.058	15.55	1.67
45			0.00										#DIV/0!		9.3	-0.15	302	271	215	244	319	270	1646	425	83	67	83	65	73	-0.058	15.58	1.73
46			0.00										#DIV/0!		9.2	-0.15	303	272	216	245	321	271	1644	424	83	67	83	65	73	-0.058	15.56	1.96
47			0.00										#DIV/0!		9.1	-0.13	305	274	216	246	324	273	1651	425	83	67	83	65	73	-0.058	15.51	2.07
48			0.00										#DIV/0!		8.9	-0.15	307	275	217	247	326	274	1652	426	83	67	83	65	73	-0.058	15.51	2.03
49			0.00										#DIV/0!		8.7	-0.15	308	276	218	248	329	276	1654	427	83	67	83	65	73	-0.058	15.56	1.87
50			0.00										#DIV/0!		8.6	-0.15	309	277	219	248	332	277	1654	428	83	67	83	65	73	-0.058	15.65	1.49
51			0.00										#DIV/0!		8.4	-0.15	311	278	220	249	334	278	1638	431	83	68	83	65	73	-0.058	15.69	1.16
52			0.00										#DIV/0!		8.3	-0.09	312	279	221	251	336	280	1632	430	83	68	83	65	73	-0.058	15.75	0.82
53			0.00										#DIV/0!		8.2	-0.15	315	280	222	252	339	282	1639	432	83	68	83	65	73	-0.057	15.69	0.52
54			0.00										#DIV/0!		8.0	-0.15	317	281	224	253	341	283	1650	432	83	68	83	65	73	-0.058	15.63	0.52
55			0.00										#DIV/0!		7.9	-0.13	319	282	225	254	343	285	1657	435	83	68	83	65	73	-0.058	15.64	0.48
56			0.00										#DIV/0!		7.8	-0.11	321	283	227	254	345	286	1658	436	83	68	83	65	73	-0.058	15.73	0.48
57			0.00										#DIV/0!		7.6	-0.15	323	285	228	256	348	288	1668	437	83	68	83	65	73	-0.058	15.72	0.39
58			0.00										#DIV/0!		7.5	-0.15	330	285	230	257	349	290	1619	435	83	68	83	65	73	-0.058	15.61	0.35
59			0.00										#DIV/0!		7.4	-0.09	333	286	232	258	351	292	1653	435	83	68	83	65	74	-0.058	15.15	0.27
60			0.00										#DIV/0!		7.2	-0.15	337	287	235	258	353	294	1664	434	83	68	83	65	74	-0.058	14.98	0.18
61			0.00										#DIV/0!		7.1	-0.15	339	287	238	259	353	295	1663	435	83	68	83	65	74	-0.058	15.1	0.49
62			0.00										#DIV/0!		7.0	-0.09	343	287	242	260	355	297	1662	436	83	68	83	65	74	-0.058	15.18	0.61
63			0.00										#DIV/0!		6.8	-0.15	347	288	246	260	356	299	1658	436	83	68	83	65	74	-0.058	15.2	0.61
64			0.00										#DIV/0!		6.7	-0.15	351	289	251	261	357	302	1624	434	83	68	83	65	74	-0.057	15.35	0.72
65			0.00										#DIV/0!		6.6	-0.09	354	289	255	261	358	303	1607	434	83	69	83	65	74	-0.058	15.29	0.54
66			0.00										#DIV/0!		6.5	-0.11	358	290	260	261	359	306	1605	434	83	69	83	65	74	-0.058	15.08	0.3
67			0.00										#DIV/0!		6.3	-0.15	362	290	265	261	360	308	1608	434	83	69	83	65	74	-0.058	14.98	0.21
68			0.00										#DIV/0!		6.3	-0.09	365	290	269	262	360	309	1591	432	83	69	83	66	74	-0.057	15.05	0.21
69			0.00										#DIV/0!		6.1	-0.15	370	290	274	261	360	311	1591	433	83	69	83	66	74	-0.058	15.04	0.16
70			0.00										#DIV/0!		6.0	-0.11	374	290	278	262	362	313	1587	433	83	69	83	66	74	-0.057	15.02	0.11
71			0.00										#DIV/0!		5.9	-0.13	378	290	283	261	362	315	1584	434	83	69	83	66	75	-0.058	15.18	0.11
72			0.00										#DIV/0!		5.7	-0.11	383	290	288	261	362	317	1569	435	83	69	83	66	75	-0.058	15.02	0.11
73			0.00										#DIV/0!		5.6	-0.15	388	291	293	260	362	319	1620	438	83	69	83	66	75	-0.058	15.07	0.11

Wood Heater Test Data

Run: 1

Manufacturer: Hearth & Home
Model: Dauntless-CAT
Tracking No.: 2389
Project No.: 061WS104E
Test Date: 02-Oct-19
Beginning Clock Time: 15:54

Total Sampling Time: 125 min
Recording Interval: 1 min
Background Sample Volume: _____ cubic feet

Meter Box Y Factor: 0.992 (1) 0.989 (2) _____ (Amb)

Barometric Pressure:	Begin	Middle	End	Average
	29.34		29.47	29.41 0

OMNI Equipment Numbers: _____

PM Control Modules: 371, 372
Dilution Tunnel MW(dry): 29.00 lb/lb-mole
Dilution Tunnel MW(wet): 28.78 lb/lb-mole
Dilution Tunnel H2O: 2.00 percent
Dilution Tunnel Static: -0.285 "H2O
Tunnel Area: 0.19635 ft2
Pitot Tube Cp: 0.99

Avg. Tunnel Velocity: #DIV/0! ft/sec.
Initial Tunnel Flow: #DIV/0! scfm
Average Tunnel Flow: #DIV/0! scfm
Post-Test Leak Check (1): _____ cfm @ _____ in. Hg
Post-Test Leak Check (2): _____ cfm @ _____ in. Hg
Average Test Piece Fuel Moisture: 22.81 Dry Basis %

Technician Signature: _____

Velocity Traverse Data

	Pt.1	Pt.2	Pt.3	Pt.4	Pt.5	Pt.6	Pt.7	Pt.8	Center	
Initial dP										"H2O
Temp:										°F

V_{strav} _____ ft/sec V_{scent} _____ ft/sec F_p _____

	Particulate Sampling Data													Fuel Weight (lb)		Temperature Data (°F)													Stack Gas Data		
Elapsed Time (min)	Gas Meter 1 (ft^3)	Gas Meter 2 (ft^3)	Sample Rate 1 (cfm)	Sample Rate 2 (cfm)	Orifice dH 1 ("H_2O)	Meter 1 Temp (°F)	Meter 1 Vacuum ("Hg)	Orifice dH 2 ("H_2O)	Meter 2 Temp (°F)	Meter 2 Vacuum ("Hg)	Dilution Tunnel (°F)	Dilution Tunnel Center dP	Pro. Rate 1	Pro. Rate 2	Scale Reading	Weight Change	Firebox Top	Firebox Bottom	Firebox Back	Firebox Left	Firebox Right	Avg. Stove Surface	Catalyst Exit	Stack	Filter 1	Dryer Exit 1	Filter 2	Dryer Exit 2	Ambient	Draft ("H_2O)	CO_2 (%)	CO (%)
74			0.00										#DIV/0!		5.4	-0.15	392	291	298	261	363	321	1631	441	83	69	83	66	75	-0.058	15.5	0.3
75			0.00										#DIV/0!		5.3	-0.13	397	292	303	262	364	324	1623	442	83	69	83	66	75	-0.059	15.82	0.51
76			0.00										#DIV/0!		5.2	-0.15	401	292	308	263	364	326	1625	446	83	69	83	66	75	-0.060	15.87	0.55
77			0.00										#DIV/0!		5.0	-0.11	414	293	314	264	365	330	1606	448	83	69	83	66	75	-0.059	15.87	0.54
78			0.00										#DIV/0!		4.9	-0.15	433	293	320	264	364	335	1559	450	83	69	83	66	75	-0.058	15.87	0.94
79			0.00										#DIV/0!		4.8	-0.13	449	294	327	264	364	340	1516	448	83	69	83	66	76	-0.059	15.77	0.75
80			0.00										#DIV/0!		4.6	-0.11	459	296	334	263	365	343	1481	444	83	69	83	66	76	-0.058	15.56	0.38
81			0.00										#DIV/0!		4.5	-0.15	463	298	340	262	364	345	1465	441	83	69	83	66	76	-0.058	15.16	0.2
82			0.00										#DIV/0!		4.4	-0.13	466	299	346	260	364	347	1529	441	83	69	83	66	76	-0.059	14.78	0.11
83			0.00										#DIV/0!		4.2	-0.15	469	300	349	260	365	349	1605	443	84	69	83	66	76	-0.058	14.9	0.08
84			0.00										#DIV/0!		4.1	-0.11	471	302	351	259	364	349	1622	442	84	69	83	66	76	-0.059	15.61	0.5
85			0.00										#DIV/0!		3.9	-0.15	471	304	353	258	364	350	1632	443	84	69	83	66	76	-0.059	15.85	0.89
86			0.00										#DIV/0!		3.8	-0.13	470	306	354	258	363	350	1610	441	84	69	83	66	76	-0.059	15.89	1.09
87			0.00										#DIV/0!		3.7	-0.11	468	308	357	258	363	351	1593	441	83	69	83	66	76	-0.059	15.77	1.09
88			0.00										#DIV/0!		3.5	-0.15	469	310	360	257	363	352	1585	440	83	69	83	66	76	-0.059	15.5	0.83
89			0.00										#DIV/0!		3.5	-0.09	469	310	364	256	362	352	1570	440	83	69	83	66	76	-0.059	15.4	0.69
90			0.00										#DIV/0!		3.3	-0.15	473	311	368	256	360	354	1552	439	83	70	83	66	76	-0.059	15.4	0.57
91			0.00										#DIV/0!		3.2	-0.11	475	312	372	256	360	355	1545	437	83	70	83	66	77	-0.058	15.26	0.44
92			0.00										#DIV/0!		3.1	-0.09	477	313	377	256	359	356	1531	437	84	70	83	66	77	-0.057	14.96	0.38
93			0.00										#DIV/0!		3.0	-0.11	481	314	381	256	358	358	1528	434	84	70	83	66	76	-0.056	14.78	0.31
94			0.00										#DIV/0!		2.9	-0.09	482	314	384	255	358	359	1530	434	84	70	83	66	76	-0.056	14.6	0.27
95			0.00										#DIV/0!		2.9	0.00	484	315	388	255	357	360	1536	434	84	70	83	66	76	-0.057	14.56	0.25
96			0.00										#DIV/0!		2.7	-0.15	487	315	392	254	357	361	1556	435	84	70	83	66	76	-0.058	14.64	0.27
97			0.00										#DIV/0!		2.6	-0.11	490	316	396	254	357	363	1582	437	84	70	83	66	77	-0.058	14.82	0.34
98			0.00										#DIV/0!		2.5	-0.13	494	317	399	255	358	365	1574	440	83	70	83	66	77	-0.058	15.11	0.66
99			0.00										#DIV/0!		2.4	-0.11	496	317	404	255	356	366	1568	439	83	70	83	66	77	-0.058	15.3	0.72
100			0.00										#DIV/0!		2.3	-0.09	500	318	408	255	356	367	1563	440	83	70	83	66	77	-0.058	15.37	0.63
101			0.00										#DIV/0!		2.2	-0.11	503	319	411	256	356	369	1543	440	84	70	83	66	77	-0.057	15.44	0.58
102			0.00										#DIV/0!		2.1	-0.09	506	320	414	256	357	371	1524	438	84	70	83	66	77	-0.057	15.39	0.42
103			0.00										#DIV/0!		2.0	-0.15	509	320	418	256	356	372	1515	437	84	70	83	66	77	-0.057	15.17	0.25
104			0.00										#DIV/0!		1.9	-0.07	512	321	420	256	357	373	1507	436	84	70	83	66	78	-0.056	15	0.17
105			0.00										#DIV/0!		1.8	-0.09	513	322	422	256	357	374	1505	434	84	70	83	66	78	-0.057	14.84	0.13
106			0.00										#DIV/0!		1.7	-0.11	516	322	424	255	357	375	1504	434	84	70	83	66	78	-0.057	14.72	0.1
107			0.00										#DIV/0!		1.6	-0.13	522	323	426	255	357	377	1505	435	84	70	83	66	78	-0.056	14.63	0.1
108			0.00										#DIV/0!		1.4	-0.11	532	324	429	255	358	380	1491	436	83	70	83	66	78	-0.057	14.69	0.11
109			0.00										#DIV/0!		1.3	-0.11	539	326	431	255	359	382	1450	435	83	70	83	66	78	-0.057	15	0.17
110			0.00										#DIV/0!		1.3	-0.09	540	327	433	254	358	382	1417	431	84	70	83	66	78	-0.056	14.68	0.1

Wood Heater Test Data

Run: 1

Manufacturer: Hearth & Home
Model: Dauntless-CAT
Tracking No.: 2389
Project No.: 061WS104E
Test Date: 02-Oct-19
Beginning Clock Time: 15:54

Total Sampling Time: 125 min
Recording Interval: 1 min
Background Sample Volume: _____ cubic feet

Meter Box Y Factor: 0.992 (1) 0.989 (2) _____ (Amb)

Barometric Pressure:	Begin	Middle	End	Average
	29.34		29.47	29.41 0

OMNI Equipment Numbers: _____

PM Control Modules: 371, 372
Dilution Tunnel MW(dry): 29.00 lb/lb-mole
Dilution Tunnel MW(wet): 28.78 lb/lb-mole
Dilution Tunnel H2O: 2.00 percent
Dilution Tunnel Static: -0.285 "H2O
Tunnel Area: 0.19635 ft2
Pitot Tube Cp: 0.99

Avg. Tunnel Velocity: #DIV/0! ft/sec.
Initial Tunnel Flow: #DIV/0! scfm
Average Tunnel Flow: #DIV/0! scfm
Post-Test Leak Check (1): _____ cfm @ _____ in. Hg
Post-Test Leak Check (2): _____ cfm @ _____ in. Hg
Average Test Piece Fuel Moisture: 22.81 Dry Basis %

Technician Signature: _____

Velocity Traverse Data

	Pt.1	Pt.2	Pt.3	Pt.4	Pt.5	Pt.6	Pt.7	Pt.8	Center	
Initial dP										"H2O
Temp:										°F

V_{strav} _____ ft/sec V_{scent} _____ ft/sec F_p _____

	Particulate Sampling Data														Fuel Weight (lb)		Temperature Data (°F)													Stack Gas Data		
Elapsed Time (min)	Gas Meter 1 (ft^3)	Gas Meter 2 (ft^3)	Sample Rate 1 (cfm)	Sample Rate 2 (cfm)	Orifice dH 1 ("H_2O)	Meter 1 Temp (°F)	Meter 1 Vacuum ("Hg)	Orifice dH 2 ("H_2O)	Meter 2 Temp (°F)	Meter 2 Vacuum ("Hg)	Dilution Tunnel (°F)	Dilution Tunnel Center dP	Pro. Rate 1	Pro. Rate 2	Scale Reading	Weight Change	Firebox Top	Firebox Bottom	Firebox Back	Firebox Left	Firebox Right	Avg. Stove Surface	Catalyst Exit	Stack	Filter 1	Dryer Exit 1	Filter 2	Dryer Exit 2	Ambient	Draft ("H_2O)	CO_2 (%)	CO (%)
111			0.00										#DIV/0!		1.2	-0.04	541	329	435	253	359	383	1405	428	84	70	83	66	78	-0.056	14.12	0.04
112			0.00										#DIV/0!		1.1	-0.15	541	330	437	252	359	384	1400	425	84	70	83	66	78	-0.056	13.78	0.01
113			0.00										#DIV/0!		1.0	-0.04	540	331	438	251	358	384	1408	424	84	70	83	66	78	-0.056	13.56	0.01
114			0.00										#DIV/0!		0.9	-0.07	538	332	439	247	357	383	1412	421	84	70	83	66	78	-0.056	13.5	0.01
115			0.00										#DIV/0!		0.8	-0.13	537	333	441	246	357	383	1418	420	84	70	83	66	78	-0.056	13.57	0.01
116			0.00										#DIV/0!		0.7	-0.07	537	333	442	244	356	382	1421	420	83	70	83	66	79	-0.056	13.56	0.01
117			0.00										#DIV/0!		0.7	-0.09	536	333	442	244	356	382	1425	420	83	70	83	66	79	-0.056	13.52	0.01
118			0.00										#DIV/0!		0.5	-0.11	535	333	444	243	355	382	1424	419	83	70	83	66	79	-0.055	13.53	0.02
119			0.00										#DIV/0!		0.5	-0.04	534	334	444	242	354	382	1421	418	83	70	83	66	79	-0.055	13.53	0.02
120			0.00										#DIV/0!		0.4	-0.11	534	334	445	241	355	382	1414	416	83	70	83	66	79	-0.055	13.53	0.02
121			0.00										#DIV/0!		0.3	-0.04	533	334	445	241	355	382	1410	417	83	70	83	66	79	-0.055	13.54	0.01
122			0.00										#DIV/0!		0.3	-0.09	532	335	446	240	355	382	1405	416	83	70	83	66	79	-0.055	13.52	0.01
123			0.00										#DIV/0!		0.1	-0.11	533	335	446	239	354	381	1408	414	84	70	83	66	79	-0.055	13.52	0
124			0.00										#DIV/0!		0.1	-0.04	533	335	447	238	354	381	1404	415	83	70	83	66	79	-0.055	13.52	0
125			0.00										#DIV/0!		0.0	-0.11	533	335	447	238	354	381	1398	415	83	70	83	66	79	-0.054	13.51	0
Avg/Tot	0.000	0.000	0.00	#DIV/0!	#DIV/0!	#DIV/0!		#DIV/0!	#DIV/0!		#DIV/0!	#DIV/0!	#DIV/0!	#DIV/0!								131.8				68	83	65	75	-0.050		

Wood Heater Test Results - ASTM E2780 / ASTM E2515

Manufacturer: Hearth & Home
Model: Dauntless-CAT
Project No.: 061WS104E
Tracking No.: 2389
Run: 1
Test Date: 10/02/19

Burn Rate	**2.88 kg/hr dry**
Total Time of Test	125 minutes

	AMBIENT	SAMPLE TRAIN 1	SAMPLE TRAIN 2	FIRST HOUR FILTER (TRAIN 1)
	#DIV/0!			

	FINAL AVERAGE RESULTS

	QUALITY CHECKS
Ambient Temp (55-90°F)	OK

Technician Signature: _____

Wood Heater Efficiency Results - CSA B415.1

Manufacturer: Hearth & Home
Model: Dauntless-CAT
Date: 10/02/19
Run: 1
Control #: 061WS104E
Test Duration: 125
Output Category: IV

Technician Signature:

Test Results in Accordance with CSA B415.1-09

	HHV Basis	LHV Basis
Overall Efficiency	74.9%	80.1%
Combustion Efficiency	93.9%	93.9%
Heat Transfer Efficiency	80%	85.3%

Output Rate (kJ/h)	44,215	41,943	**(Btu/h)**
Burn Rate (kg/h)	2.96	6.52	**(lb/h)**
Input (kJ/h)	59,007	55,974	**(Btu/h)**

Test Load Weight (dry kg)	6.16	13.57	**dry lb**
MC wet (%)	18.57151166		
MC dry (%)	22.81		
Particulate (g)	#DIV/0!		
CO (g)	518		
Test Duration (h)	2.08		

Emissions	**Particulate**	**CO**
g/MJ Output	#DIV/0!	5.62
g/kg Dry Fuel	#DIV/0!	84.10
g/h	#DIV/0!	248.63
lb/MM Btu Output	#DIV/0!	13.07

Air/Fuel Ratio (A/F)	7.23

VERSION: **2.2** **12/14/2009**

Run 2

Medium Burn

Wood Heater Test Data

7

Run: 2

Manufacturer: Hearth & Home
Model: Dauntless-CAT
Tracking No.: 2389
Project No.: 061WS104E
Test Date: 02-Oct-19
Beginning Clock Time: 15:54

Total Sampling Time: 500 min
Recording Interval: 2 min
Background Sample Volume: _____ cubic feet

Meter Box Y Factor: 0.992 (1) 0.989 (2) _____ (Amb)

Barometric Pressure:	Begin	Middle	End	Average
	29.49		29.58	29.54 0

OMNI Equipment Numbers: _____

PM Control Modules: 371, 372
Dilution Tunnel MW(dry): 29.00 lb/lb-mole
Dilution Tunnel MW(wet): 28.78 lb/lb-mole
Dilution Tunnel H2O: 2.00 percent
Dilution Tunnel Static: -0.281 "H2O
Tunnel Area: 0.19635 ft2
Pitot Tube Cp: 0.99

Avg. Tunnel Velocity: 19.49 ft/sec.
Initial Tunnel Flow: 211.6 scfm
Average Tunnel Flow: 217.9 scfm
Post-Test Leak Check (1): 0.000 cfm @ 8 in. Hg
Post-Test Leak Check (2): 0.000 cfm @ 8 in. Hg
Average Test Piece Fuel Moisture: 22.12 Dry Basis %

Technician Signature:

Velocity Traverse Data	Pt.1	Pt.2	Pt.3	Pt.4	Pt.5	Pt.6	Pt.7	Pt.8	Center	
Initial dP	0.080	0.090	0.080	0.076	0.076	0.080	0.084	0.078	0.086	"H2O
Temp:	88	88	88	88	88	88	88	88	88	°F

V_{strav} 19.37 ft/sec V_{scent} 19.95 ft/sec F_p 0.971

	Particulate Sampling Data														Fuel Weight (lb)		Temperature Data (°F)													Stack Gas Data		
Elapsed Time (min)	Gas Meter 1 (ft^3)	Gas Meter 2 (ft^3)	Sample Rate 1 (cfm)	Sample Rate 2 (cfm)	Orifice dH 1 ("H_2O)	Meter 1 Temp (°F)	Meter 1 Vacuum ("Hg)	Orifice dH 2 ("H_2O)	Meter 2 Temp (°F)	Meter 2 Vacuum ("Hg)	Dilution Tunnel (°F)	Dilution Tunnel Center dP	Pro. Rate 1	Pro. Rate 2	Scale Reading	Weight Change	Firebox Top	Firebox Bottom	Firebox Back	Firebox Left	Firebox Right	Avg. Stove Surface	Catalyst Exit	Stack	Filter 1	Dryer Exit 1	Filter 2	Dryer Exit 2	Ambient	Draft ("H_2O)	CO_2 (%)	CO (%)
0	0.000	0.000			1.66	75	0.44	2.31	72	-1.9	82	0.090			21.8		407	313	377	200	346	329	1032	224	85	66	82	64	78	-0.029	7.53	0.13
2	0.304	0.337	0.15	0.17	2.26	75	0.3	1.74	72	-3.1	85	0.090	92	97	21.2	-0.60	381	308	370	197	343	320	1060	225	86	64	82	64	78	-0.032	4.64	0.16
4	0.632	0.681	0.16	0.17	2.22	75	0.58	1.76	72	-3	83	0.090	99	99	21.1	-0.11	356	303	361	193	342	311	1134	218	87	64	81	64	78	-0.033	7.18	0.06
6	0.964	1.024	0.17	0.17	2.33	75	0.48	1.76	72	-3.1	82	0.090	100	98	21.0	-0.09	337	297	351	191	340	303	1170	220	85	64	81	63	78	-0.034	7.81	0.06
8	1.297	1.368	0.17	0.17	2.32	75	0.1	1.77	72	-3	81	0.090	100	99	20.9	-0.11	320	291	342	189	337	296	1164	220	84	63	81	63	78	-0.034	7.65	0.16
10	1.628	1.712	0.17	0.17	2.30	75	0.58	1.76	72	-3	81	0.090	100	99	20.8	-0.09	306	285	333	188	334	289	1167	221	84	63	81	63	78	-0.034	7.47	0.18
12	1.960	2.055	0.17	0.17	2.31	75	0.6	1.77	72	-3.1	81	0.090	100	98	20.7	-0.11	294	279	324	186	331	283	1170	219	86	63	82	63	78	-0.033	7.46	0.16
14	2.290	2.398	0.17	0.17	2.28	75	0.51	1.76	72	-3.1	81	0.090	99	98	20.6	-0.09	283	273	315	185	328	277	1185	221	86	63	82	63	77	-0.034	7.51	0.18
16	2.621	2.741	0.17	0.17	2.29	75	0.12	1.75	72	-3	80	0.090	100	98	20.5	-0.11	274	267	307	184	324	271	1156	223	85	63	81	63	77	-0.034	7.69	0.17
18	2.950	3.084	0.16	0.17	2.27	74	0.48	1.75	72	-3	81	0.090	99	98	20.4	-0.09	266	261	299	183	320	266	1148	225	83	63	81	62	77	-0.034	7.73	0.21
20	3.280	3.426	0.17	0.17	2.27	74	0.2	1.75	72	-3	80	0.090	100	98	20.3	-0.11	259	257	292	181	316	261	1161	228	84	63	81	62	77	-0.035	7.58	0.21
22	3.609	3.768	0.16	0.17	2.27	74	0.54	1.74	72	-3.2	81	0.090	99	98	20.2	-0.09	253	252	285	180	313	257	1168	231	86	63	81	62	77	-0.035	7.72	0.28
24	3.938	4.109	0.16	0.17	2.27	74	0.07	1.75	72	-3.2	80	0.090	99	98	20.1	-0.11	248	247	278	179	308	252	1164	236	86	63	82	62	77	-0.035	8.19	0.26
26	4.266	4.451	0.16	0.17	2.27	74	0.61	1.75	72	-3.2	80	0.090	99	98	19.9	-0.15	243	242	273	178	304	248	1170	239	85	63	82	62	76	-0.036	8.33	0.25
28	4.596	4.795	0.17	0.17	2.25	74	0.09	1.79	72	-3.1	81	0.090	100	99	19.9	-0.09	239	238	267	177	300	244	1163	247	83	63	81	62	76	-0.037	8.75	0.32
30	4.923	5.142	0.16	0.17	2.27	74	0.53	1.80	72	-3.1	81	0.090	99	99	19.7	-0.11	236	234	262	177	296	241	1196	252	84	64	81	62	76	-0.037	9.64	0.26
32	5.252	5.489	0.16	0.17	2.26	74	0.45	1.79	72	-3.3	81	0.080	105	105	19.5	-0.20	232	230	257	178	293	238	1271	261	86	64	81	62	76	-0.038	10.48	0.23
34	5.581	5.835	0.16	0.17	2.27	74	0.38	1.80	71	-3.1	82	0.090	99	99	19.4	-0.15	230	227	253	180	288	236	1332	269	86	64	81	62	76	-0.040	11.29	0.24
36	5.908	6.182	0.16	0.17	2.26	74	0.51	1.79	71	-3.3	82	0.080	105	106	19.2	-0.20	227	224	248	182	285	233	1369	276	85	64	82	63	76	-0.041	12	0.23
38	6.237	6.528	0.16	0.17	2.26	74	0.19	1.80	71	-3.1	81	0.080	105	105	19.0	-0.15	225	222	244	185	282	232	1378	283	83	64	82	63	75	-0.041	12.38	0.17
40	6.564	6.875	0.16	0.17	2.27	74	0.42	1.78	71	-3	82	0.090	99	100	18.8	-0.20	224	219	241	188	278	230	1395	290	84	64	81	63	75	-0.042	12.66	0.18
42	6.892	7.221	0.16	0.17	2.25	74	0.25	1.79	71	-3.2	82	0.090	99	99	18.6	-0.20	223	217	238	191	276	229	1406	295	86	64	81	63	75	-0.043	12.7	0.15
44	7.221	7.567	0.16	0.17	2.27	74	0.32	1.79	71	-3.1	82	0.090	99	99	18.4	-0.20	223	215	236	192	272	228	1427	301	87	65	81	63	75	-0.044	12.89	0.16
46	7.548	7.914	0.16	0.17	2.27	74	0.09	1.80	71	-3.3	82	0.090	99	100	18.2	-0.20	223	213	233	195	269	227	1435	306	85	65	81	63	75	-0.045	13.03	0.16
48	7.876	8.260	0.16	0.17	2.26	74	0.49	1.78	71	-3.3	83	0.080	105	106	18.0	-0.20	225	213	231	198	267	227	1441	309	83	65	82	63	75	-0.045	13.05	0.15
50	8.203	8.606	0.16	0.17	2.26	74	0.48	1.79	71	-3.2	83	0.090	99	100	17.8	-0.20	226	211	229	201	265	226	1447	314	84	65	82	63	75	-0.046	13.11	0.16
52	8.531	8.952	0.16	0.17	2.24	74	0.6	1.78	71	-3.1	83	0.090	99	100	17.6	-0.20	227	211	227	203	262	226	1456	319	86	65	82	63	75	-0.046	13.28	0.16
54	8.859	9.298	0.16	0.17	2.23	74	0.41	1.80	71	-3.2	84	0.090	99	100	17.4	-0.20	230	210	225	206	260	226	1473	322	87	65	81	63	74	-0.047	13.45	0.17
56	9.186	9.644	0.16	0.17	2.26	74	0.14	1.78	71	-3.2	84	0.080	105	106	17.3	-0.20	232	210	224	209	259	227	1494	326	85	66	81	63	74	-0.048	13.63	0.2
58	9.514	9.990	0.16	0.17	2.24	74	0.56	1.79	71	-3.1	84	0.090	99	100	17.0	-0.26	234	209	223	210	257	227	1507	329	83	66	81	63	74	-0.048	13.81	0.21
60	9.841	10.336	0.16	0.17	2.27	74	0.58	1.79	71	-3.1	85	0.080	105	106	16.8	-0.20	237	210	222	213	257	228	1525	332	84	66	82	63	74	-0.048	14.08	0.24
62	10.173	10.682	0.17	0.17	2.25	74	0.08	1.79	71	-3.3	85	0.090	101	100	16.5	-0.24	239	209	221	214	255	228	1543	334	82	66	82	64	74	-0.049	14.24	0.26
64	10.500	11.027	0.16	0.17	2.26	74	0.06	1.79	71	-3.2	85	0.080	105	105	16.3	-0.20	243	209	221	217	255	229	1558	338	84	66	82	64	74	-0.049	14.29	0.3
66	10.827	11.373	0.16	0.17	2.25	74	0.07	1.78	71	-3.2	85	0.080	105	106	16.1	-0.24	245	210	221	220	254	230	1567	341	84	66	82	64	74	-0.050	14.38	0.37
68	11.155	11.719	0.16	0.17	2.24	74	0.3	1.78	71	-3.3	86	0.090	100	100	15.9	-0.20	249	210	221	222	254	231	1579	343	83	66	81	64	74	-0.050	14.45	0.44
70	11.481	12.065	0.16	0.17	2.25	74	0.12	1.78	71	-3.2	86	0.090	99	100	15.7	-0.20	252	211	221	225	254	233	1593	344	83	66	82	64	74	-0.050	14.56	0.57

Wood Heater Test Data

7

Run: 2

Manufacturer: Hearth & Home
Model: Dauntless-CAT
Tracking No.: 2389
Project No.: 061WS104E
Test Date: 02-Oct-19
Beginning Clock Time: 15:54

Total Sampling Time: 500 min
Recording Interval: 2 min
Background Sample Volume: _____ cubic feet

Meter Box Y Factor: 0.992 (1) 0.989 (2) _____ (Amb)

Barometric Pressure:	Begin	Middle	End	Average
	29.49		29.58	29.54 0

OMNI Equipment Numbers: _____

PM Control Modules: 371, 372
Dilution Tunnel MW(dry): 29.00 lb/lb-mole
Dilution Tunnel MW(wet): 28.78 lb/lb-mole
Dilution Tunnel H2O: 2.00 percent
Dilution Tunnel Static: -0.281 "H2O
Tunnel Area: 0.19635 ft2
Pitot Tube Cp: 0.99

Avg. Tunnel Velocity: 19.49 ft/sec.
Initial Tunnel Flow: 211.6 scfm
Average Tunnel Flow: 217.9 scfm
Post-Test Leak Check (1): 0.000 cfm @ 8 in. Hg
Post-Test Leak Check (2): 0.000 cfm @ 8 in. Hg
Average Test Piece Fuel Moisture: 22.12 Dry Basis %

Technician Signature:

Velocity Traverse Data

	Pt.1	Pt.2	Pt.3	Pt.4	Pt.5	Pt.6	Pt.7	Pt.8	Center	
Initial dP	0.080	0.090	0.080	0.076	0.076	0.080	0.084	0.078	0.086	"H2O
Temp:	88	88	88	88	88	88	88	88	88	°F

V_{strav} 19.37 ft/sec V_{scent} 19.95 ft/sec F_p 0.971

Elapsed Time (min)	Particulate Sampling Data: Gas Meter 1 (ft^3)	Gas Meter 2 (ft^3)	Sample Rate 1 (cfm)	Sample Rate 2 (cfm)	Orifice dH 1 ("H_2O)	Meter 1 Temp (°F)	Meter 1 Vacuum ("Hg)	Orifice dH 2 ("H_2O)	Meter 2 Temp (°F)	Meter 2 Vacuum ("Hg)	Dilution Tunnel (°F)	Dilution Tunnel Center dP	Pro. Rate 1	Pro. Rate 2	Fuel Weight (lb): Scale Reading	Weight Change	Temperature Data (°F): Firebox Top	Firebox Bottom	Firebox Back	Firebox Left	Firebox Right	Avg. Stove Surface	Catalyst Exit	Stack	Filter 1	Dryer Exit 1	Filter 2	Dryer Exit 2	Ambient	Stack Gas Data: Draft ("H_2O)	CO_2 (%)	CO (%)
72	11.808	12.410	0.16	0.17	2.24	74	0.1	1.78	71	-3.3	86	0.090	99	100	15.4	-0.26	256	212	221	226	253	234	1604	347	86	67	82	64	74	-0.050	14.68	0.8
74	12.134	12.756	0.16	0.17	2.24	74	0.35	1.78	71	-3.1	86	0.090	99	100	15.2	-0.24	259	213	221	229	253	235	1610	349	87	67	82	64	74	-0.051	14.76	1.12
76	12.460	13.101	0.16	0.17	2.24	74	0.2	1.79	71	-3.2	86	0.090	99	100	15.0	-0.24	263	213	221	231	253	236	1611	350	85	67	82	64	74	-0.051	14.74	1.28
78	12.787	13.447	0.16	0.17	2.23	74	0.08	1.78	71	-3.3	87	0.090	99	100	14.7	-0.26	268	214	222	234	253	238	1605	355	83	67	82	64	74	-0.052	14.78	1.5
80	13.113	13.792	0.16	0.17	2.23	74	0.45	1.79	71	-3.2	87	0.090	99	100	14.4	-0.29	272	215	223	235	253	240	1594	358	84	67	82	64	74	-0.053	14.66	2.61
82	13.438	14.137	0.16	0.17	2.23	74	0.35	1.77	71	-3.3	88	0.080	105	106	14.1	-0.26	276	217	224	237	254	242	1594	359	86	67	82	64	74	-0.053	14.58	3.02
84	13.763	14.483	0.16	0.17	2.23	74	0.27	1.79	71	-3.1	88	0.080	105	106	13.9	-0.29	280	218	225	238	254	243	1590	360	87	67	82	64	74	-0.053	14.41	3.21
86	14.088	14.828	0.16	0.17	2.20	74	0.48	1.77	71	-3.1	88	0.090	99	100	13.5	-0.31	283	218	227	239	254	244	1584	362	86	67	82	65	74	-0.054	14.43	3.42
88	14.414	15.174	0.16	0.17	2.21	74	0.11	1.77	71	-3.3	88	0.090	99	100	13.3	-0.24	286	219	228	240	255	246	1580	360	83	67	82	65	74	-0.053	14.3	3.82
90	14.738	15.519	0.16	0.17	2.23	74	0.05	1.78	71	-3.1	88	0.090	98	100	13.0	-0.31	292	220	230	241	256	248	1575	359	83	68	82	65	74	-0.053	14.31	3.7
92	15.062	15.864	0.16	0.17	2.22	74	0.08	1.78	71	-3.4	88	0.090	98	100	12.7	-0.31	297	222	232	241	256	250	1575	359	85	68	82	65	74	-0.053	14.29	3.78
94	15.388	16.209	0.16	0.17	2.25	74	0.55	1.78	71	-3.1	88	0.080	105	106	12.4	-0.24	303	223	234	242	256	252	1589	355	87	68	82	65	74	-0.052	14.23	3.67
96	15.716	16.554	0.16	0.17	2.27	74	0.22	1.77	71	-3.2	88	0.090	100	100	12.2	-0.24	310	224	236	243	257	254	1595	351	86	68	82	65	74	-0.052	14.29	2.55
98	16.044	16.899	0.16	0.17	2.25	74	0.28	1.78	71	-3.1	88	0.090	100	100	12.0	-0.20	318	225	238	243	257	256	1595	349	84	68	82	65	74	-0.052	14.34	2.21
100	16.372	17.244	0.16	0.17	2.27	74	0.02	1.78	71	-3.1	88	0.090	100	100	11.7	-0.26	325	227	241	243	258	259	1600	349	83	68	83	65	74	-0.052	14.34	2.13
102	16.700	17.590	0.16	0.17	2.25	73	0.46	1.78	71	-3.3	87	0.090	100	100	11.5	-0.20	331	228	243	244	259	261	1606	347	85	68	82	65	74	-0.051	14.3	1.99
104	17.028	17.935	0.16	0.17	2.25	73	0.06	1.77	71	-3.2	87	0.090	100	100	11.3	-0.24	338	230	245	243	260	263	1612	346	87	68	82	65	74	-0.051	14.31	1.85
106	17.355	18.281	0.16	0.17	2.26	73	0.47	1.76	71	-3.3	87	0.090	99	100	11.1	-0.20	343	231	247	244	260	265	1611	346	86	68	82	65	74	-0.051	14.36	1.75
108	17.683	18.625	0.16	0.17	2.25	74	0.47	1.79	71	-3.4	87	0.090	100	99	10.9	-0.24	348	232	249	245	261	267	1607	345	84	68	82	65	74	-0.051	14.38	1.71
110	18.010	18.971	0.16	0.17	2.25	73	0.39	1.77	71	-3.3	87	0.090	99	100	10.7	-0.20	354	233	251	244	261	269	1611	344	83	68	82	65	74	-0.050	14.38	1.74
112	18.337	19.316	0.16	0.17	2.25	73	0.02	1.79	71	-3.2	87	0.090	99	100	10.4	-0.22	358	235	253	244	262	270	1609	344	84	68	82	66	74	-0.051	14.36	1.6
114	18.664	19.661	0.16	0.17	2.24	73	0.05	1.78	71	-3.4	87	0.080	106	106	10.2	-0.24	361	236	256	244	263	272	1606	344	86	69	82	66	74	-0.050	14.33	1.51
116	18.991	20.006	0.16	0.17	2.26	73	0.24	1.79	71	-3.4	87	0.090	99	100	10.0	-0.20	368	237	258	244	264	274	1599	344	87	69	82	66	74	-0.050	14.35	1.53
118	19.318	20.352	0.16	0.17	2.25	73	0.25	1.78	71	-3.3	87	0.090	99	100	9.8	-0.20	373	238	261	244	265	276	1585	339	85	69	82	66	74	-0.049	14.22	0.99
120	19.644	20.697	0.16	0.17	2.24	73	0.46	1.78	71	-3.3	87	0.090	99	100	9.6	-0.15	375	239	264	244	266	278	1579	339	83	69	82	66	74	-0.049	14.16	0.81
122	19.971	21.043	0.16	0.17	2.25	73	0.56	1.78	71	-3.2	87	0.090	99	100	9.4	-0.20	373	239	267	244	267	278	1574	337	84	69	82	66	74	-0.049	13.93	0.69
124	20.297	21.388	0.16	0.17	2.23	73	0.56	1.77	71	-3.3	87	0.090	99	100	9.2	-0.20	370	240	272	243	267	278	1549	333	86	69	82	66	74	-0.049	13.97	0.51
126	20.623	21.733	0.16	0.17	2.23	73	0.12	1.79	71	-3.1	86	0.090	99	100	9.1	-0.15	367	241	276	243	268	279	1508	331	87	69	82	66	74	-0.048	13.62	0.3
128	20.949	22.078	0.16	0.17	2.24	73	0.01	1.77	71	-3.2	86	0.090	99	100	8.9	-0.15	365	242	281	241	269	280	1456	327	85	69	82	66	74	-0.047	13.09	0.18
130	21.275	22.424	0.16	0.17	2.24	73	0.12	1.79	71	-3.2	86	0.090	99	100	8.8	-0.13	363	243	286	239	270	280	1412	322	83	69	82	66	74	-0.046	12.34	0.13
132	21.602	22.769	0.16	0.17	2.22	73	0.38	1.77	70	-3.2	85	0.090	99	100	8.7	-0.15	363	243	291	236	270	281	1384	317	84	69	81	66	74	-0.045	11.78	0.08
134	21.927	23.114	0.16	0.17	2.25	73	0.05	1.80	70	-3.2	85	0.090	99	100	8.5	-0.11	363	243	295	234	270	281	1356	313	86	69	81	66	74	-0.045	11.59	0.06
136	22.254	23.460	0.16	0.17	2.07	73	0.14	1.79	70	-3.3	85	0.090	99	100	8.4	-0.15	362	243	299	231	270	281	1332	310	87	69	82	66	74	-0.044	11.32	0.06
138	22.586	23.806	0.17	0.17	2.33	73	0.19	1.80	70	-3.1	85	0.090	101	100	8.3	-0.13	362	244	303	229	270	282	1318	306	85	69	82	66	74	-0.044	11.1	0.06
140	22.918	24.152	0.17	0.17	2.32	73	0	1.79	70	-3.3	84	0.090	101	100	8.1	-0.11	361	244	307	226	270	282	1303	302	83	69	82	66	74	-0.043	11.03	0.06
142	23.250	24.498	0.17	0.17	2.33	73	0.06	1.78	70	-3.3	84	0.090	101	100	8.0	-0.15	360	244	310	224	269	281	1297	299	83	69	82	66	74	-0.042	10.91	0.08

Wood Heater Test Data

7

Run: 2

Manufacturer: Hearth & Home
Model: Dauntless-CAT
Tracking No.: 2389
Project No.: 061WS104E
Test Date: 02-Oct-19
Beginning Clock Time: 15:54

Total Sampling Time: 500 min
Recording Interval: 2 min
Background Sample Volume: _____ cubic feet

Meter Box Y Factor: 0.992 (1) 0.989 (2) _____ (Amb)

Barometric Pressure:	Begin	Middle	End	Average
	29.49		29.58	29.54 0

OMNI Equipment Numbers: _____

PM Control Modules: 371, 372
Dilution Tunnel MW(dry): 29.00 lb/lb-mole
Dilution Tunnel MW(wet): 28.78 lb/lb-mole
Dilution Tunnel H2O: 2.00 percent
Dilution Tunnel Static: -0.281 "H2O
Tunnel Area: 0.19635 ft2
Pitot Tube Cp: 0.99

Avg. Tunnel Velocity: 19.49 ft/sec.
Initial Tunnel Flow: 211.6 scfm
Average Tunnel Flow: 217.9 scfm
Post-Test Leak Check (1): 0.000 cfm @ 8 in. Hg
Post-Test Leak Check (2): 0.000 cfm @ 8 in. Hg
Average Test Piece Fuel Moisture: 22.12 Dry Basis %

Technician Signature: _____

Velocity Traverse Data

	Pt.1	Pt.2	Pt.3	Pt.4	Pt.5	Pt.6	Pt.7	Pt.8	Center	
Initial dP	0.080	0.090	0.080	0.076	0.076	0.080	0.084	0.078	0.086	"H2O
Temp:	88	88	88	88	88	88	88	88	88	°F

V_{strav} 19.37 ft/sec V_{scent} 19.95 ft/sec F_p 0.971

	Particulate Sampling Data														Fuel Weight (lb)		Temperature Data (°F)													Stack Gas Data		
Elapsed Time (min)	Gas Meter 1 (ft^3)	Gas Meter 2 (ft^3)	Sample Rate 1 (cfm)	Sample Rate 2 (cfm)	Orifice dH 1 ("H_2O)	Meter 1 Temp (°F)	Meter 1 Vacuum ("Hg)	Orifice dH 2 ("H_2O)	Meter 2 Temp (°F)	Meter 2 Vacuum ("Hg)	Dilution Tunnel (°F)	Dilution Tunnel Center dP	Pro. Rate 1	Pro. Rate 2	Scale Reading	Weight Change	Firebox Top	Firebox Bottom	Firebox Back	Firebox Left	Firebox Right	Avg. Stove Surface	Catalyst Exit	Stack	Filter 1	Dryer Exit 1	Filter 2	Dryer Exit 2	Ambient	Draft ("H_2O)	CO_2 (%)	CO (%)
144	23.582	24.843	0.17	0.17	2.30	73	0.04	1.78	70	-3.2	84	0.090	101	100	7.9	-0.09	359	244	313	222	270	282	1296	298	85	69	81	66	74	-0.042	10.94	0.11
146	23.914	25.189	0.17	0.17	2.32	73	-0.02	1.78	70	-3.2	84	0.080	107	106	7.8	-0.11	360	244	316	220	269	282	1288	295	87	69	81	66	74	-0.042	10.99	0.14
148	24.247	25.535	0.17	0.17	2.32	73	0.06	1.79	70	-3.3	84	0.090	101	100	7.6	-0.15	359	244	319	218	269	282	1283	293	86	69	82	66	74	-0.041	10.95	0.13
150	24.578	25.880	0.17	0.17	2.32	73	0.22	1.78	70	-3.1	84	0.090	100	100	7.5	-0.09	359	244	322	216	269	282	1269	292	84	69	82	66	74	-0.041	10.92	0.14
152	24.911	26.226	0.17	0.17	2.33	73	0.4	1.79	70	-3.1	83	0.090	101	100	7.4	-0.15	359	244	324	215	268	282	1258	290	83	69	82	67	74	-0.041	10.77	0.16
154	25.242	26.572	0.17	0.17	2.32	73	0.45	1.78	70	-3.1	83	0.090	100	100	7.3	-0.09	360	244	326	213	267	282	1262	290	85	69	82	67	74	-0.040	10.76	0.22
156	25.573	26.917	0.17	0.17	2.32	73	-0.03	1.79	70	-3.1	83	0.090	100	99	7.2	-0.15	362	244	328	212	267	283	1290	291	87	69	81	67	74	-0.041	11.14	0.29
158	25.905	27.263	0.17	0.17	2.30	73	-0.03	1.77	70	-3.1	83	0.090	101	100	7.0	-0.11	363	243	331	211	267	283	1292	291	86	69	81	67	74	-0.040	11.68	0.34
160	26.235	27.608	0.16	0.17	2.32	73	-0.02	1.79	70	-3.3	83	0.090	100	99	7.0	-0.09	365	244	333	210	266	284	1262	288	84	68	81	67	74	-0.040	11.3	0.33
162	26.567	27.954	0.17	0.17	2.28	73	0.51	1.79	70	-3.1	82	0.090	101	100	6.8	-0.11	364	244	335	209	265	283	1215	283	83	68	82	67	74	-0.038	10.59	0.32
164	26.898	28.300	0.17	0.17	2.32	73	0.52	1.79	70	-3.3	83	0.090	100	100	6.7	-0.15	365	243	336	207	264	283	1171	278	85	68	82	67	74	-0.038	9.8	0.28
166	27.229	28.646	0.17	0.17	2.31	73	0.3	1.79	70	-3.1	82	0.090	100	100	6.6	-0.04	366	243	337	205	264	283	1142	273	87	68	82	67	74	-0.037	9.4	0.25
168	27.560	28.992	0.17	0.17	2.31	73	0.12	1.78	70	-3.2	82	0.080	106	106	6.6	-0.09	366	242	338	202	263	282	1123	271	87	68	81	67	75	-0.037	9.23	0.23
170	27.891	29.338	0.17	0.17	2.28	73	0.46	1.79	70	-3.3	82	0.080	106	106	6.5	-0.07	366	242	338	200	263	282	1110	267	85	68	81	67	75	-0.036	9.16	0.22
172	28.221	29.684	0.17	0.17	2.30	73	0.31	1.78	70	-3.1	82	0.090	100	100	6.4	-0.09	367	242	339	197	262	281	1099	265	83	68	81	67	75	-0.036	9.15	0.22
174	28.553	30.030	0.17	0.17	2.30	73	0.41	1.78	70	-3.3	82	0.090	101	100	6.3	-0.11	366	241	339	195	261	280	1091	263	84	68	82	67	75	-0.036	9.11	0.22
176	28.883	30.375	0.16	0.17	2.30	73	0.45	1.78	70	-3.2	81	0.090	100	99	6.2	-0.09	365	241	338	192	261	279	1087	261	86	68	82	67	75	-0.036	9.08	0.22
178	29.214	30.721	0.17	0.17	2.30	73	0.48	1.79	70	-3.2	81	0.090	100	100	6.1	-0.07	366	241	338	191	261	279	1081	260	87	68	82	67	75	-0.034	9.09	0.23
180	29.544	31.067	0.17	0.17	2.31	73	0.51	1.79	70	-3.4	81	0.090	100	100	6.1	-0.09	366	240	338	189	260	279	1079	258	85	68	81	67	75	-0.035	9.09	0.25
182	29.875	31.413	0.17	0.17	2.30	73	0.5	1.79	70	-3.1	81	0.090	100	100	5.9	-0.11	365	240	338	187	259	278	1075	258	84	68	81	67	75	-0.035	9.01	0.26
184	30.205	31.759	0.16	0.17	2.30	73	-0.01	1.78	70	-3.3	81	0.090	100	100	5.9	-0.09	364	240	337	185	258	277	1072	257	84	68	81	67	75	-0.034	9.01	0.28
186	30.536	32.104	0.17	0.17	2.30	73	-0.03	1.79	70	-3.2	81	0.090	100	99	5.8	-0.04	363	239	337	184	257	276	1079	256	86	68	81	67	75	-0.035	9.1	0.28
188	30.865	32.450	0.16	0.17	2.30	73	0.36	1.78	70	-3.4	81	0.090	100	100	5.7	-0.11	362	239	336	183	257	275	1076	256	87	68	82	67	75	-0.034	9.14	0.27
190	31.196	32.796	0.17	0.17	2.30	73	0.5	1.80	70	-3.4	81	0.080	106	106	5.6	-0.11	362	238	335	182	255	274	1079	257	86	68	82	67	75	-0.034	9.22	0.27
192	31.526	33.142	0.16	0.17	2.30	73	0.31	1.79	70	-3.1	80	0.090	100	99	5.5	-0.09	361	237	335	180	255	274	1100	257	84	68	82	67	75	-0.034	9.38	0.29
194	31.857	33.488	0.17	0.17	2.29	73	-0.02	1.80	70	-3.1	80	0.090	100	99	5.4	-0.11	360	237	335	180	253	273	1136	258	84	68	82	67	75	-0.035	9.3	0.4
196	32.186	33.834	0.16	0.17	2.30	73	-0.01	1.78	70	-3.2	81	0.090	100	100	5.3	-0.09	359	236	334	179	252	272	1177	262	85	68	81	67	75	-0.036	8.95	0.77
198	32.518	34.179	0.17	0.17	2.29	73	0.5	1.78	70	-3.2	81	0.090	100	99	5.2	-0.11	358	236	332	180	251	271	1199	266	87	68	81	67	75	-0.036	9.11	0.96
200	32.847	34.525	0.16	0.17	2.30	73	0.49	1.78	70	-3.3	81	0.090	100	100	5.1	-0.13	356	235	332	180	250	271	1230	272	87	68	81	67	75	-0.037	9.23	1.08
202	33.178	34.871	0.17	0.17	2.30	73	0.51	1.78	70	-3.2	81	0.090	100	100	4.9	-0.11	355	235	331	182	249	270	1271	280	84	68	82	67	75	-0.039	9.61	1.17
204	33.507	35.216	0.16	0.17	2.29	73	0.01	1.79	70	-3.4	81	0.090	100	99	4.8	-0.11	354	234	330	184	248	270	1307	289	84	68	82	67	75	-0.040	10.25	0.99
206	33.837	35.561	0.17	0.17	2.28	73	0.29	1.78	70	-3.1	82	0.090	100	99	4.7	-0.13	353	234	329	187	247	270	1344	296	85	68	82	67	75	-0.041	10.77	0.78
208	34.166	35.907	0.16	0.17	2.29	73	-0.02	1.79	70	-3.2	82	0.090	100	100	4.6	-0.15	354	234	329	190	246	271	1379	300	87	68	82	68	75	-0.041	11.19	0.58
210	34.496	36.252	0.17	0.17	2.26	73	0.48	1.78	70	-3.2	82	0.090	100	99	4.4	-0.11	353	234	328	194	245	271	1385	304	87	68	82	68	75	-0.041	11.5	0.42
212	34.824	36.597	0.16	0.17	2.29	73	0.08	1.79	70	-3.2	83	0.080	105	105	4.4	-0.09	355	233	328	197	244	271	1364	304	85	68	82	68	75	-0.041	11.36	0.39
214	35.153	36.942	0.16	0.17	2.26	73	0.17	1.79	70	-3.4	82	0.090	100	99	4.2	-0.15	354	234	328	199	243	272	1325	302	84	68	81	68	75	-0.041	10.91	0.46

Wood Heater Test Data

7

Run: 2

Manufacturer: Hearth & Home
Model: Dauntless-CAT
Tracking No.: 2389
Project No.: 061WS104E
Test Date: 02-Oct-19
Beginning Clock Time: 15:54

Total Sampling Time: 500 min
Recording Interval: 2 min
Background Sample Volume: _____ cubic feet

Meter Box Y Factor: 0.992 (1) 0.989 (2) _____ (Amb)

Barometric Pressure:	Begin	Middle	End	Average
	29.49		29.58	29.54 0

OMNI Equipment Numbers: _____

PM Control Modules: 371, 372
Dilution Tunnel MW(dry): 29.00 lb/lb-mole
Dilution Tunnel MW(wet): 28.78 lb/lb-mole
Dilution Tunnel H2O: 2.00 percent
Dilution Tunnel Static: -0.281 "H2O
Tunnel Area: 0.19635 ft2
Pitot Tube Cp: 0.99

Avg. Tunnel Velocity: 19.49 ft/sec.
Initial Tunnel Flow: 211.6 scfm
Average Tunnel Flow: 217.9 scfm
Post-Test Leak Check (1): 0.000 cfm @ 8 in. Hg
Post-Test Leak Check (2): 0.000 cfm @ 8 in. Hg
Average Test Piece Fuel Moisture: 22.12 Dry Basis %

Technician Signature: _____

Velocity Traverse Data

	Pt.1	Pt.2	Pt.3	Pt.4	Pt.5	Pt.6	Pt.7	Pt.8	Center	
Initial dP	0.080	0.090	0.080	0.076	0.076	0.080	0.084	0.078	0.086	"H2O
Temp:	88	88	88	88	88	88	88	88	88	°F

V_{strav} 19.37 ft/sec V_{scent} 19.95 ft/sec F_p 0.971

Elapsed Time (min)	Particulate Sampling Data: Gas Meter 1 (ft^3)	Gas Meter 2 (ft^3)	Sample Rate 1 (cfm)	Sample Rate 2 (cfm)	Orifice dH 1 ("H_2O)	Meter 1 Temp (°F)	Meter 1 Vacuum ("Hg)	Orifice dH 2 ("H_2O)	Meter 2 Temp (°F)	Meter 2 Vacuum ("Hg)	Dilution Tunnel (°F)	Dilution Tunnel Center dP	Pro. Rate 1	Pro. Rate 2	Fuel Weight (lb): Scale Reading	Weight Change	Temperature Data (°F): Firebox Top	Firebox Bottom	Firebox Back	Firebox Left	Firebox Right	Avg. Stove Surface	Catalyst Exit	Stack	Filter 1	Dryer Exit 1	Filter 2	Dryer Exit 2	Ambient	Stack Gas Data: Draft ("H_2O)	CO_2 (%)	CO (%)
216	35.482	37.287	0.16	0.17	2.28	73	0.05	1.78	70	-3.4	82	0.080	106	105	4.1	-0.11	356	234	327	200	242	272	1257	295	85	68	81	68	75	-0.039	10.37	0.56
218	35.810	37.632	0.16	0.17	2.28	73	0.23	1.79	70	-3.3	82	0.090	99	99	4.0	-0.09	358	233	327	198	241	271	1205	283	87	68	82	68	75	-0.037	10.46	0.31
220	36.139	37.977	0.16	0.17	2.28	73	0.38	1.78	70	-3.4	82	0.090	100	99	4.0	-0.04	360	234	327	196	241	272	1190	276	87	68	82	68	75	-0.037	10.35	0.23
222	36.467	38.322	0.16	0.17	2.28	73	-0.04	1.78	70	-3.1	81	0.090	99	99	3.8	-0.11	360	234	327	194	240	271	1188	273	86	68	82	68	75	-0.037	10.36	0.2
224	36.796	38.667	0.16	0.17	2.25	73	0.03	1.78	70	-3.1	81	0.090	100	99	3.8	-0.09	362	234	327	192	239	271	1179	270	84	68	82	68	75	-0.036	10.21	0.2
226	37.123	39.012	0.16	0.17	2.28	73	0.49	1.79	70	-3.3	81	0.090	99	99	3.6	-0.11	362	234	327	190	239	270	1160	267	84	68	82	68	75	-0.035	10.02	0.19
228	37.452	39.358	0.16	0.17	2.26	73	0.36	1.78	70	-3.2	81	0.090	100	100	3.6	-0.09	363	235	327	188	238	270	1139	265	86	68	82	68	74	-0.035	9.52	0.26
230	37.781	39.703	0.16	0.17	2.26	73	0.39	1.79	70	-3.1	81	0.090	100	99	3.5	-0.07	364	235	326	186	238	270	1115	262	87	68	81	68	75	-0.035	9.07	0.32
232	38.108	40.049	0.16	0.17	2.27	73	0.21	1.78	70	-3.2	81	0.080	105	106	3.4	-0.09	365	235	327	184	237	270	1093	259	86	68	81	68	75	-0.034	8.47	0.41
234	38.436	40.395	0.16	0.17	2.26	73	0.37	1.78	70	-3.2	81	0.090	99	100	3.3	-0.07	366	236	326	182	237	269	1074	256	84	68	81	68	75	-0.034	7.91	0.46
236	38.763	40.740	0.16	0.17	2.27	73	0.44	1.78	70	-3.2	80	0.090	99	99	3.3	-0.04	365	236	326	179	237	269	1057	253	84	68	82	68	75	-0.033	7.65	0.48
238	39.092	41.085	0.16	0.17	2.26	73	0.1	1.78	70	-3.4	81	0.090	100	99	3.2	-0.09	367	237	326	177	236	269	1037	250	85	68	82	68	74	-0.033	7.77	0.5
240	39.421	41.431	0.16	0.17	2.26	73	0.03	1.79	70	-3.4	80	0.090	99	99	3.1	-0.07	368	237	327	176	236	269	1012	248	87	68	82	68	75	-0.033	8.03	0.47
242	39.748	41.776	0.16	0.17	2.27	73	0.41	1.78	70	-3.2	80	0.090	99	99	3.1	-0.04	367	238	327	174	236	268	988	244	87	68	82	68	75	-0.031	7.9	0.44
244	40.077	42.122	0.16	0.17	2.27	73	-0.03	1.79	70	-3.1	79	0.090	99	99	3.0	-0.09	367	240	327	172	236	268	962	241	84	68	82	68	75	-0.031	7.68	0.4
246	40.405	42.467	0.16	0.17	2.29	73	0.48	1.79	70	-3.4	80	0.080	105	105	2.9	-0.07	369	241	327	169	235	268	944	238	84	68	81	68	74	-0.030	7.63	0.38
248	40.734	42.813	0.16	0.17	2.26	73	0.41	1.80	70	-3.3	79	0.090	99	99	2.9	-0.04	369	241	326	167	234	267	927	235	85	68	81	69	75	-0.030	7.67	0.37
250	41.063	43.159	0.16	0.17	2.29	73	0.18	1.79	70	-3.4	79	0.090	99	99	2.9	-0.04	370	242	327	165	233	267	920	230	87	68	81	69	74	-0.029	7.68	0.36
252	41.391	43.505	0.16	0.17	2.27	73	0.01	1.78	70	-3.2	79	0.090	99	99	2.8	-0.04	370	243	327	163	232	267	926	229	87	68	82	69	75	-0.029	7.66	0.37
254	41.721	43.850	0.16	0.17	2.26	73	0.5	1.79	70	-3.2	79	0.090	100	99	2.7	-0.11	370	244	327	161	232	267	921	228	85	68	82	69	75	-0.029	7.84	0.37
256	42.049	44.197	0.16	0.17	2.27	73	0.48	1.79	70	-3.2	79	0.090	99	100	2.7	-0.04	370	244	328	160	231	267	919	226	84	68	82	69	75	-0.029	7.8	0.37
258	42.379	44.542	0.16	0.17	2.29	73	0.44	1.79	70	-3.3	79	0.090	100	99	2.6	-0.07	371	245	328	159	231	267	902	224	84	68	82	69	75	-0.028	7.99	0.38
260	42.707	44.889	0.16	0.17	2.29	73	0.44	1.79	70	-3.4	79	0.090	99	100	2.5	-0.04	371	246	328	157	230	266	867	221	86	68	81	69	75	-0.027	7.61	0.33
262	43.037	45.235	0.16	0.17	2.27	73	0.29	1.79	70	-3.1	78	0.090	100	99	2.5	-0.04	371	246	329	156	230	266	842	218	87	68	81	69	75	-0.027	7.46	0.3
264	43.366	45.580	0.16	0.17	2.29	73	0.06	1.79	70	-3.3	78	0.090	99	99	2.5	-0.04	371	247	329	154	230	266	823	215	86	68	81	69	75	-0.026	7.37	0.27
266	43.695	45.926	0.16	0.17	2.26	73	0.12	1.80	70	-3.3	78	0.090	99	99	2.4	-0.07	371	247	329	153	229	266	812	210	84	68	81	69	75	-0.025	7.23	0.26
268	44.024	46.273	0.16	0.17	2.29	73	0.32	1.79	70	-3.4	78	0.090	99	100	2.3	-0.04	372	247	328	151	228	265	806	208	84	68	82	69	75	-0.025	7.11	0.28
270	44.353	46.619	0.16	0.17	2.28	73	0.23	1.80	70	-3.2	78	0.090	99	99	2.3	0.00	370	247	328	150	228	265	798	206	86	68	82	69	75	-0.024	7	0.3
272	44.683	46.965	0.16	0.17	2.29	73	0.41	1.79	70	-3.2	78	0.090	100	99	2.3	-0.04	370	247	326	148	227	264	793	203	87	68	82	69	74	-0.023	6.89	0.3
274	45.012	47.311	0.16	0.17	2.27	73	0.49	1.80	70	-3.4	77	0.090	99	99	2.3	-0.04	368	247	325	146	226	262	792	203	87	68	81	69	75	-0.023	6.82	0.33
276	45.342	47.658	0.16	0.17	2.27	73	0.21	1.79	70	-3.3	77	0.090	99	99	2.3	0.00	366	247	324	145	226	262	787	201	84	68	81	69	75	-0.022	6.85	0.35
278	45.670	48.004	0.16	0.17	2.28	73	0.33	1.80	70	-3.1	77	0.090	99	99	2.2	-0.07	366	247	321	144	225	261	777	199	84	68	81	69	75	-0.023	6.82	0.35
280	46.000	48.351	0.16	0.17	2.28	73	-0.01	1.79	70	-3.2	76	0.090	99	99	2.1	-0.04	365	247	319	143	225	260	770	197	85	68	81	69	75	-0.022	6.76	0.34
282	46.328	48.697	0.16	0.17	2.29	73	0.26	1.80	70	-3.4	76	0.090	99	99	2.1	0.00	364	248	317	141	224	259	765	196	87	68	81	69	75	-0.022	6.73	0.35
284	46.658	49.044	0.16	0.17	2.26	73	0.32	1.79	70	-3.3	76	0.090	99	99	2.1	-0.04	363	248	315	140	224	258	770	195	87	68	82	69	75	-0.022	6.73	0.35
286	46.987	49.390	0.16	0.17	2.28	73	0.51	1.80	70	-3.1	76	0.090	99	99	2.0	-0.07	362	248	312	139	223	257	783	195	85	68	82	69	75	-0.022	6.92	0.39

Wood Heater Test Data

7

Run: 2

Manufacturer: Hearth & Home
Model: Dauntless-CAT
Tracking No.: 2389
Project No.: 061WS104E
Test Date: 02-Oct-19
Beginning Clock Time: 15:54

Total Sampling Time: 500 min
Recording Interval: 2 min
Background Sample Volume: _____ cubic feet

Meter Box Y Factor: 0.992 (1) 0.989 (2) _____ (Amb)

Barometric Pressure:	Begin	Middle	End	Average
	29.49		29.58	29.54 0

OMNI Equipment Numbers: _____

PM Control Modules: 371, 372
Dilution Tunnel MW(dry): 29.00 lb/lb-mole
Dilution Tunnel MW(wet): 28.78 lb/lb-mole
Dilution Tunnel H2O: 2.00 percent
Dilution Tunnel Static: -0.281 "H2O
Tunnel Area: 0.19635 ft2
Pitot Tube Cp: 0.99

Avg. Tunnel Velocity: 19.49 ft/sec.
Initial Tunnel Flow: 211.6 scfm
Average Tunnel Flow: 217.9 scfm
Post-Test Leak Check (1): 0.000 cfm @ 8 in. Hg
Post-Test Leak Check (2): 0.000 cfm @ 8 in. Hg
Average Test Piece Fuel Moisture: 22.12 Dry Basis %

Technician Signature:

Velocity Traverse Data

	Pt.1	Pt.2	Pt.3	Pt.4	Pt.5	Pt.6	Pt.7	Pt.8	Center	
Initial dP	0.080	0.090	0.080	0.076	0.076	0.080	0.084	0.078	0.086	"H2O
Temp:	88	88	88	88	88	88	88	88	88	°F

V_{strav} 19.37 ft/sec V_{scent} 19.95 ft/sec F_p 0.971

Elapsed Time (min)	Particulate Sampling Data: Gas Meter 1 (ft^3)	Gas Meter 2 (ft^3)	Sample Rate 1 (cfm)	Sample Rate 2 (cfm)	Orifice dH 1 ("H_2O)	Meter 1 Temp (°F)	Meter 1 Vacuum ("Hg)	Orifice dH 2 ("H_2O)	Meter 2 Temp (°F)	Meter 2 Vacuum ("Hg)	Dilution Tunnel (°F)	Dilution Tunnel Center dP	Pro. Rate 1	Pro. Rate 2	Fuel Weight (lb): Scale Reading	Weight Change	Temperature Data (°F): Firebox Top	Firebox Bottom	Firebox Back	Firebox Left	Firebox Right	Avg. Stove Surface	Catalyst Exit	Stack	Filter 1	Dryer Exit 1	Filter 2	Dryer Exit 2	Ambient	Stack Gas Data: Draft ("H_2O)	CO_2 (%)	CO (%)
288	47.316	49.737	0.16	0.17	2.27	73	0.49	1.79	70	-3.4	76	0.090	99	99	2.0	0.00	359	249	310	138	223	256	772	194	84	68	81	69	74	-0.021	6.85	0.37
290	47.645	50.084	0.16	0.17	2.29	73	-0.04	1.80	70	-3.3	76	0.090	99	99	2.0	-0.04	358	249	307	137	222	255	761	193	85	68	81	69	74	-0.021	6.75	0.36
292	47.975	50.431	0.16	0.17	2.28	73	-0.02	1.80	70	-3.1	76	0.090	99	99	2.0	-0.04	357	250	305	136	222	254	755	191	87	68	81	69	74	-0.021	6.69	0.35
294	48.304	50.777	0.16	0.17	2.26	73	0.11	1.80	70	-3.4	75	0.090	99	99	2.0	0.00	355	250	302	135	221	253	747	190	88	68	81	69	74	-0.020	6.68	0.35
296	48.633	51.125	0.16	0.17	2.29	73	0.12	1.79	70	-3.4	75	0.090	99	100	1.9	-0.04	354	251	299	134	220	252	739	189	86	68	81	69	74	-0.020	6.6	0.34
298	48.963	51.471	0.16	0.17	2.28	73	0.38	1.80	70	-3.4	75	0.090	99	99	1.9	0.00	352	251	297	133	219	250	731	188	84	68	81	69	74	-0.020	6.61	0.33
300	49.292	51.818	0.16	0.17	2.28	73	0.39	1.80	70	-3.4	75	0.090	99	99	1.8	-0.07	351	251	294	133	218	249	724	186	84	68	81	69	74	-0.020	6.54	0.33
302	49.622	52.165	0.16	0.17	2.29	73	0	1.81	70	-3.2	75	0.090	99	99	1.8	0.00	349	252	291	132	218	248	717	186	86	68	81	69	74	-0.019	6.43	0.32
304	49.951	52.512	0.16	0.17	2.29	73	-0.04	1.80	70	-3.3	75	0.090	99	99	1.8	-0.04	348	252	289	131	217	247	712	184	88	68	81	69	74	-0.019	6.46	0.31
306	50.281	52.859	0.16	0.17	2.29	73	0.02	1.80	70	-3.1	75	0.090	99	99	1.8	0.00	347	253	286	130	216	246	707	182	87	68	81	69	74	-0.018	6.47	0.31
308	50.610	53.206	0.16	0.17	2.29	73	0.25	1.80	70	-3.2	75	0.090	99	99	1.8	-0.04	346	254	284	129	216	246	700	181	85	68	81	69	74	-0.018	6.4	0.3
310	50.940	53.553	0.16	0.17	2.28	72	0.4	1.81	70	-3.3	75	0.090	99	99	1.8	0.00	344	254	281	129	215	245	693	180	84	68	81	69	74	-0.018	6.38	0.3
312	51.269	53.900	0.16	0.17	2.30	73	0.46	1.80	70	-3.4	74	0.090	99	99	1.7	-0.04	343	254	279	128	215	244	689	179	85	68	81	69	74	-0.018	6.37	0.3
314	51.599	54.247	0.16	0.17	2.27	72	0.05	1.80	70	-3.2	74	0.090	99	99	1.7	0.00	343	254	276	127	214	243	684	178	87	68	81	69	74	-0.018	6.33	0.29
316	51.928	54.594	0.16	0.17	2.29	72	0.32	1.80	70	-3.1	74	0.090	99	99	1.6	-0.07	341	255	274	126	213	242	681	177	88	68	81	69	73	-0.017	6.32	0.29
318	52.258	54.941	0.17	0.17	2.26	72	0.37	1.80	70	-3.2	74	0.090	99	99	1.6	0.00	341	255	272	126	211	241	675	176	86	67	81	69	73	-0.017	6.33	0.28
320	52.587	55.288	0.16	0.17	2.30	72	0.49	1.79	70	-3.2	74	0.090	99	99	1.6	0.00	339	255	270	125	211	240	673	175	84	68	81	69	73	-0.017	6.32	0.29
322	52.917	55.635	0.16	0.17	2.29	72	0.1	1.81	70	-3.3	74	0.080	105	105	1.6	-0.04	338	255	268	124	210	239	669	173	85	68	81	69	73	-0.017	6.3	0.28
324	53.247	55.982	0.16	0.17	2.30	72	-0.04	1.80	69	-3.4	74	0.090	99	99	1.6	0.00	337	256	266	124	210	239	666	173	87	67	81	69	73	-0.016	6.31	0.28
326	53.576	56.328	0.16	0.17	2.30	72	0.03	1.80	69	-3.1	74	0.090	99	99	1.6	-0.04	337	256	264	124	209	238	657	171	88	67	81	69	73	-0.016	6.34	0.28
328	53.907	56.676	0.17	0.17	2.30	72	0.42	1.80	69	-3.2	74	0.090	100	100	1.6	0.00	337	256	262	123	208	237	650	171	87	67	81	69	73	-0.016	6.29	0.27
330	54.236	57.022	0.16	0.17	2.28	72	0.5	1.80	69	-3.3	73	0.090	99	99	1.5	-0.04	336	256	261	122	208	237	646	170	84	67	81	69	73	-0.016	6.32	0.27
332	54.566	57.369	0.17	0.17	2.30	72	0.45	1.80	69	-3.4	74	0.090	99	99	1.5	0.00	336	256	259	122	207	236	643	169	84	67	81	69	73	-0.016	6.28	0.28
334	54.895	57.716	0.16	0.17	2.29	72	0.05	1.80	69	-3.4	74	0.090	99	99	1.5	0.00	335	256	258	121	207	235	640	168	86	67	80	69	73	-0.015	6.35	0.29
336	55.225	58.063	0.16	0.17	2.29	72	0.06	1.79	69	-3.3	74	0.080	105	105	1.4	-0.07	334	256	256	121	206	235	639	167	88	67	80	69	71	-0.015	6.29	0.28
338	55.554	58.410	0.16	0.17	2.30	72	0.2	1.81	69	-3.2	73	0.090	99	99	1.4	0.00	332	257	255	120	206	234	639	167	87	67	81	69	66	-0.015	6.3	0.29
340	55.885	58.758	0.17	0.17	2.29	72	0.18	1.81	69	-3.2	73	0.090	100	100	1.4	-0.04	331	257	253	120	205	233	636	167	85	67	81	69	66	-0.014	6.26	0.29
342	56.214	59.105	0.16	0.17	2.30	72	0.49	1.79	69	-3.2	73	0.090	99	99	1.4	-0.04	329	257	251	120	204	232	633	166	84	67	81	69	66	-0.014	6.2	0.29
344	56.545	59.452	0.17	0.17	2.30	72	0.06	1.82	69	-3.2	73	0.090	100	99	1.4	0.00	327	257	249	119	203	231	629	165	85	67	81	69	66	-0.014	6.16	0.29
346	56.874	59.800	0.16	0.17	2.30	72	0.43	1.80	69	-3.3	73	0.090	99	100	1.4	0.00	326	258	248	119	203	231	626	165	87	67	81	69	67	-0.014	6.14	0.28
348	57.205	60.147	0.17	0.17	2.30	72	0.45	1.81	69	-3.1	73	0.090	100	99	1.3	-0.07	326	258	247	119	202	230	622	164	88	67	81	69	66	-0.014	6.11	0.28
350	57.534	60.495	0.16	0.17	2.30	72	0.5	1.80	69	-3.4	73	0.090	99	100	1.3	0.00	325	259	245	118	201	230	616	163	86	67	80	69	66	-0.014	6.1	0.28
352	57.864	60.842	0.16	0.17	2.29	72	0.49	1.80	69	-3.4	73	0.090	99	99	1.3	0.00	323	259	244	118	201	229	613	162	84	67	80	69	67	-0.014	6.05	0.28
354	58.194	61.190	0.17	0.17	2.30	72	0.45	1.81	69	-3.2	72	0.090	99	99	1.2	-0.04	323	259	243	118	200	229	609	162	85	67	81	69	66	-0.014	5.95	0.28
356	58.524	61.537	0.16	0.17	2.29	72	0.42	1.81	69	-3.3	72	0.090	99	99	1.2	0.00	322	260	241	117	199	228	602	161	87	67	81	69	66	-0.013	5.93	0.28
358	58.854	61.885	0.16	0.17	2.31	72	0.01	1.81	69	-3.4	72	0.090	99	99	1.2	-0.04	322	260	240	117	198	227	597	160	88	67	81	69	66	-0.013	5.9	0.27

Wood Heater Test Data

7

Run: 2

Manufacturer: Hearth & Home
Model: Dauntless-CAT
Tracking No.: 2389
Project No.: 061WS104E
Test Date: 02-Oct-19
Beginning Clock Time: 15:54

Total Sampling Time: 500 min
Recording Interval: 2 min
Background Sample Volume: _____ cubic feet

Meter Box Y Factor: 0.992 (1) 0.989 (2) _____ (Amb)

Barometric Pressure:	Begin	Middle	End	Average
	29.49		29.58	29.54 0

OMNI Equipment Numbers: _____

PM Control Modules: 371, 372
Dilution Tunnel MW(dry): 29.00 lb/lb-mole
Dilution Tunnel MW(wet): 28.78 lb/lb-mole
Dilution Tunnel H2O: 2.00 percent
Dilution Tunnel Static: -0.281 "H2O
Tunnel Area: 0.19635 ft2
Pitot Tube Cp: 0.99

Avg. Tunnel Velocity: 19.49 ft/sec.
Initial Tunnel Flow: 211.6 scfm
Average Tunnel Flow: 217.9 scfm
Post-Test Leak Check (1): 0.000 cfm @ 8 in. Hg
Post-Test Leak Check (2): 0.000 cfm @ 8 in. Hg
Average Test Piece Fuel Moisture: 22.12 Dry Basis %

Technician Signature: _____

Velocity Traverse Data

	Pt.1	Pt.2	Pt.3	Pt.4	Pt.5	Pt.6	Pt.7	Pt.8	Center	
Initial dP	0.080	0.090	0.080	0.076	0.076	0.080	0.084	0.078	0.086	"H2O
Temp:	88	88	88	88	88	88	88	88	88	°F

V_{strav} 19.37 ft/sec V_{scent} 19.95 ft/sec F_p 0.971

	Particulate Sampling Data														Fuel Weight (lb)		Temperature Data (°F)													Stack Gas Data		
Elapsed Time (min)	Gas Meter 1 (ft^3)	Gas Meter 2 (ft^3)	Sample Rate 1 (cfm)	Sample Rate 2 (cfm)	Orifice dH 1 ("H_2O)	Meter 1 Temp (°F)	Meter 1 Vacuum ("Hg)	Orifice dH 2 ("H_2O)	Meter 2 Temp (°F)	Meter 2 Vacuum ("Hg)	Dilution Tunnel (°F)	Dilution Tunnel Center dP	Pro. Rate 1	Pro. Rate 2	Scale Reading	Weight Change	Firebox Top	Firebox Bottom	Firebox Back	Firebox Left	Firebox Right	Avg. Stove Surface	Catalyst Exit	Stack	Filter 1	Dryer Exit 1	Filter 2	Dryer Exit 2	Ambient	Draft ("H_2O)	CO_2 (%)	CO (%)
360	59.184	62.233	0.16	0.17	2.29	72	0.39	1.81	69	-3.1	72	0.090	99	99	1.2	0.00	321	261	239	117	198	227	590	159	87	67	81	69	66	-0.013	5.83	0.27
362	59.513	62.580	0.16	0.17	2.30	72	0.17	1.81	69	-3.4	72	0.090	99	99	1.2	0.00	319	261	237	116	198	226	583	158	85	67	80	69	66	-0.013	5.77	0.26
364	59.844	62.928	0.17	0.17	2.29	72	0.24	1.81	69	-3.3	72	0.080	106	105	1.2	-0.04	318	261	236	116	197	226	577	158	84	67	80	69	66	-0.013	5.68	0.26
366	60.174	63.275	0.16	0.17	2.31	72	-0.03	1.81	69	-3.3	72	0.090	99	99	1.2	0.00	317	262	235	115	197	225	571	157	86	67	80	69	65	-0.013	5.67	0.26
368	60.504	63.623	0.16	0.17	2.28	72	0.47	1.80	69	-3.4	72	0.090	99	99	1.1	-0.07	317	262	233	115	196	225	566	156	88	67	80	69	66	-0.012	5.64	0.25
370	60.833	63.970	0.16	0.17	2.31	72	0.24	1.82	69	-3.3	72	0.090	99	99	1.1	0.00	315	262	232	114	195	224	561	155	87	67	80	69	66	-0.012	5.6	0.25
372	61.164	64.318	0.17	0.17	2.29	72	0.39	1.80	69	-3.3	72	0.090	100	99	1.1	0.00	314	262	231	114	194	223	556	154	85	67	80	69	66	-0.012	5.58	0.25
374	61.493	64.666	0.16	0.17	2.31	72	0.46	1.81	69	-3.4	72	0.090	99	99	1.1	0.00	313	262	230	114	193	222	551	154	84	67	79	69	66	-0.012	5.53	0.25
376	61.824	65.014	0.17	0.17	2.29	72	-0.04	1.81	69	-3.1	72	0.080	106	105	1.0	-0.04	311	262	228	113	192	221	547	153	85	67	79	69	66	-0.012	5.54	0.24
378	62.154	65.362	0.17	0.17	2.30	72	0.1	1.81	69	-3.4	71	0.090	99	99	1.0	0.00	309	262	227	113	192	221	543	152	87	67	79	69	65	-0.012	5.5	0.24
380	62.483	65.710	0.16	0.17	2.29	72	0.37	1.81	69	-3.2	71	0.090	99	99	1.0	0.00	309	262	225	112	191	220	540	151	88	67	79	69	65	-0.011	5.49	0.24
382	62.814	66.058	0.17	0.17	2.30	72	-0.04	1.80	69	-3.1	71	0.090	99	99	1.0	-0.04	308	262	224	112	191	219	535	151	86	67	79	69	66	-0.011	5.47	0.24
384	63.143	66.406	0.16	0.17	2.30	72	0.33	1.81	69	-3.1	71	0.090	99	99	1.0	0.00	307	262	223	112	190	219	532	150	84	67	79	69	66	-0.011	5.42	0.24
386	63.473	66.753	0.16	0.17	2.28	72	0	1.81	69	-3.1	71	0.090	99	99	1.0	0.00	306	261	222	112	189	218	530	150	85	67	78	69	65	-0.011	5.42	0.24
388	63.803	67.101	0.16	0.17	2.30	72	0.51	1.83	69	-3.3	71	0.090	99	99	1.0	-0.04	305	261	221	111	189	217	529	149	87	67	79	69	66	-0.010	5.46	0.24
390	64.134	67.449	0.17	0.17	2.28	71	0.08	1.80	69	-3.2	71	0.090	100	99	1.0	0.00	305	261	220	111	189	217	528	148	88	67	79	69	66	-0.011	5.44	0.24
392	64.462	67.797	0.16	0.17	2.30	71	-0.03	1.82	69	-3.3	71	0.090	99	99	1.0	0.00	304	261	219	111	188	217	525	147	87	67	80	69	65	-0.010	5.43	0.24
394	64.793	68.146	0.17	0.17	2.28	71	0.25	1.81	69	-3.1	71	0.090	100	100	0.9	-0.07	303	261	218	110	187	216	522	147	85	67	80	69	65	-0.010	5.41	0.24
396	65.122	68.494	0.16	0.17	2.30	71	0.5	1.82	69	-3.1	71	0.090	99	99	0.9	0.00	302	260	216	110	186	215	519	146	85	66	79	69	65	-0.010	5.39	0.24
398	65.453	68.843	0.17	0.17	2.30	71	0.5	1.80	69	-3.2	71	0.090	100	100	0.9	0.00	301	260	215	110	185	214	521	146	86	66	79	69	65	-0.010	5.34	0.24
400	65.782	69.191	0.16	0.17	2.30	71	-0.04	1.81	69	-3.2	71	0.090	99	99	0.8	-0.04	299	259	214	109	185	213	522	146	88	66	79	69	65	-0.010	5.36	0.24
402	66.113	69.539	0.17	0.17	2.30	71	-0.03	1.83	69	-3.4	71	0.090	100	99	0.8	0.00	299	259	213	109	184	213	524	146	88	66	78	69	65	-0.010	5.43	0.26
404	66.442	69.888	0.16	0.17	2.30	71	0.01	1.80	69	-3.4	71	0.090	99	100	0.8	0.00	297	259	212	109	184	212	523	145	85	66	78	69	65	-0.010	5.34	0.25
406	66.772	70.236	0.17	0.17	2.29	71	0.25	1.82	69	-3.4	70	0.090	99	99	0.8	-0.04	296	259	211	109	183	212	520	145	84	66	78	69	66	-0.010	5.29	0.25
408	67.102	70.584	0.16	0.17	2.30	71	0.04	1.81	69	-3.1	70	0.090	99	99	0.8	0.00	294	258	210	108	183	211	517	145	86	66	80	69	65	-0.010	5.22	0.25
410	67.432	70.932	0.16	0.17	2.29	71	0.51	1.82	69	-3.1	70	0.090	99	99	0.8	0.00	293	258	209	108	182	210	514	144	88	66	83	69	65	-0.010	5.26	0.25
412	67.761	71.280	0.16	0.17	2.31	71	0.22	1.80	69	-3.1	70	0.090	99	99	0.8	-0.04	292	257	208	108	181	209	521	144	88	66	84	69	65	-0.010	5.23	0.25
414	68.092	71.628	0.17	0.17	2.29	71	0.27	1.82	69	-3.4	70	0.090	100	99	0.8	0.00	293	256	207	108	181	209	541	144	86	66	83	69	65	-0.009	5.54	0.35
416	68.421	71.976	0.16	0.17	2.31	71	-0.03	1.81	69	-3.3	70	0.090	99	99	0.7	-0.07	294	256	206	108	180	209	547	145	85	66	83	69	65	-0.010	5.79	0.38
418	68.751	72.324	0.16	0.17	2.28	71	0.06	1.82	69	-3.4	70	0.090	99	99	0.7	0.00	296	255	206	108	179	209	543	145	85	66	82	68	65	-0.010	5.79	0.36
420	69.080	72.672	0.16	0.17	2.31	71	-0.04	1.82	69	-3.4	70	0.090	99	99	0.7	0.00	298	254	206	108	178	209	535	145	87	66	81	68	65	-0.009	5.79	0.34
422	69.410	73.021	0.16	0.17	2.30	71	0.22	1.80	69	-3.4	70	0.090	99	100	0.6	-0.04	300	253	205	108	178	209	527	144	88	66	80	68	65	-0.009	5.76	0.32
424	69.740	73.369	0.16	0.17	2.30	71	0.49	1.82	69	-3.3	70	0.080	105	105	0.6	0.00	302	252	205	107	178	209	521	144	87	66	80	68	65	-0.009	5.76	0.31
426	70.070	73.717	0.16	0.17	2.30	71	-0.04	1.81	69	-3.4	70	0.090	99	99	0.6	-0.04	303	251	205	107	177	209	513	143	85	66	79	68	65	-0.009	5.74	0.3
428	70.400	74.066	0.17	0.17	2.31	71	0.06	1.82	69	-3.2	70	0.090	99	100	0.6	0.00	304	250	204	107	176	208	507	143	85	66	79	68	65	-0.009	5.72	0.29
430	70.730	74.414	0.16	0.17	2.30	71	0.21	1.81	69	-3.1	70	0.090	99	99	0.6	0.00	303	249	204	107	176	208	505	142	86	66	78	68	65	-0.009	5.66	0.28

Wood Heater Test Data

7

Run: 2

Manufacturer: Hearth & Home
Model: Dauntless-CAT
Tracking No.: 2389
Project No.: 061WS104E
Test Date: 02-Oct-19
Beginning Clock Time: 15:54

Total Sampling Time: 500 min
Recording Interval: 2 min
Background Sample Volume: _____ cubic feet

Meter Box Y Factor: 0.992 (1) 0.989 (2) _____ (Amb)

Barometric Pressure:	Begin	Middle	End	Average
	29.49		29.58	29.54 0

OMNI Equipment Numbers: _____

PM Control Modules: 371, 372
Dilution Tunnel MW(dry): 29.00 lb/lb-mole
Dilution Tunnel MW(wet): 28.78 lb/lb-mole
Dilution Tunnel H2O: 2.00 percent
Dilution Tunnel Static: -0.281 "H2O
Tunnel Area: 0.19635 ft2
Pitot Tube Cp: 0.99

Avg. Tunnel Velocity: 19.49 ft/sec.
Initial Tunnel Flow: 211.6 scfm
Average Tunnel Flow: 217.9 scfm
Post-Test Leak Check (1): 0.000 cfm @ 8 in. Hg
Post-Test Leak Check (2): 0.000 cfm @ 8 in. Hg
Average Test Piece Fuel Moisture: 22.12 Dry Basis %

Technician Signature:

Velocity Traverse Data

	Pt.1	Pt.2	Pt.3	Pt.4	Pt.5	Pt.6	Pt.7	Pt.8	Center	
Initial dP	0.080	0.090	0.080	0.076	0.076	0.080	0.084	0.078	0.086	"H2O
Temp:	88	88	88	88	88	88	88	88	88	°F

V_{strav} 19.37 ft/sec V_{scent} 19.95 ft/sec F_p 0.971

	Particulate Sampling Data														Fuel Weight (lb)		Temperature Data (°F)													Stack Gas Data		
Elapsed Time (min)	Gas Meter 1 (ft^3)	Gas Meter 2 (ft^3)	Sample Rate 1 (cfm)	Sample Rate 2 (cfm)	Orifice dH 1 ("H_2O)	Meter 1 Temp (°F)	Meter 1 Vacuum ("Hg)	Orifice dH 2 ("H_2O)	Meter 2 Temp (°F)	Meter 2 Vacuum ("Hg)	Dilution Tunnel (°F)	Dilution Tunnel Center dP	Pro. Rate 1	Pro. Rate 2	Scale Reading	Weight Change	Firebox Top	Firebox Bottom	Firebox Back	Firebox Left	Firebox Right	Avg. Stove Surface	Catalyst Exit	Stack	Filter 1	Dryer Exit 1	Filter 2	Dryer Exit 2	Ambient	Draft ("H_2O)	CO_2 (%)	CO (%)
432	71.060	74.763	0.16	0.17	2.31	71	0.19	1.82	69	-3.3	70	0.090	99	100	0.5	-0.07	303	248	204	107	175	207	508	142	88	66	77	68	65	-0.009	5.58	0.32
434	71.389	75.112	0.16	0.17	2.30	71	0.44	1.82	69	-3.3	70	0.090	99	100	0.5	0.00	302	247	203	106	174	206	505	142	88	66	78	68	65	-0.009	5.54	0.32
436	71.719	75.460	0.16	0.17	2.30	71	0.22	1.81	69	-3.2	70	0.090	99	99	0.5	0.00	301	245	203	106	174	206	501	142	85	66	79	68	65	-0.009	5.5	0.31
438	72.049	75.809	0.17	0.17	2.29	71	0.37	1.82	69	-3.4	70	0.090	99	100	0.5	-0.04	300	244	202	106	174	205	498	142	85	66	79	68	65	-0.009	5.53	0.31
440	72.379	76.158	0.16	0.17	2.30	71	0.02	1.80	69	-3.1	70	0.090	99	100	0.5	0.00	300	243	202	106	173	205	494	141	86	66	79	68	65	-0.009	5.49	0.31
442	72.708	76.506	0.16	0.17	2.29	71	0.5	1.81	69	-3.4	70	0.090	99	99	0.5	-0.04	300	242	202	105	172	204	487	140	88	66	79	68	65	-0.009	5.43	0.31
444	73.038	76.855	0.16	0.17	2.30	71	-0.02	1.83	69	-3.4	70	0.090	99	100	0.5	0.00	299	241	202	105	171	204	482	140	88	66	79	68	65	-0.009	5.36	0.3
446	73.367	77.204	0.16	0.17	2.30	71	0.49	1.80	69	-3.2	70	0.090	99	100	0.5	0.00	299	240	201	105	170	203	477	139	86	66	79	68	65	-0.009	5.32	0.3
448	73.697	77.552	0.16	0.17	2.30	71	0.5	1.83	69	-3.2	69	0.090	99	99	0.4	-0.04	298	239	201	105	170	203	472	139	85	66	78	68	65	-0.008	5.32	0.3
450	74.027	77.902	0.16	0.17	2.29	71	0.32	1.82	69	-3.4	69	0.090	99	100	0.4	0.00	297	238	201	104	170	202	467	138	86	66	77	68	65	-0.008	5.28	0.3
452	74.357	78.251	0.16	0.17	2.30	71	0.07	1.82	69	-3.1	69	0.080	105	105	0.4	0.00	297	237	201	104	169	202	463	137	88	66	76	68	65	-0.008	5.26	0.31
454	74.686	78.599	0.16	0.17	2.30	71	0.47	1.83	69	-3.4	69	0.090	99	99	0.4	0.00	296	236	201	103	169	201	460	137	89	66	76	68	65	-0.008	5.23	0.31
456	75.016	78.948	0.16	0.17	2.29	71	0.09	1.82	69	-3.2	69	0.090	99	99	0.3	-0.07	296	235	200	103	168	200	456	136	87	66	76	68	65	-0.008	5.22	0.31
458	75.345	79.297	0.16	0.17	2.31	71	-0.01	1.82	69	-3.4	69	0.090	99	99	0.3	0.00	296	234	200	103	167	200	452	136	85	66	76	68	65	-0.008	5.23	0.31
460	75.675	79.646	0.16	0.17	2.29	70	0.19	1.82	69	-3.1	69	0.090	99	99	0.3	0.00	295	233	200	102	168	200	447	135	85	66	78	68	64	-0.008	5.19	0.31
462	76.004	79.994	0.16	0.17	2.31	70	0.51	1.82	69	-3.1	69	0.090	99	99	0.3	-0.04	294	233	200	102	167	199	444	134	87	66	81	68	65	-0.007	5.18	0.31
464	76.334	80.343	0.16	0.17	2.30	70	0.34	1.80	69	-3.1	69	0.090	99	99	0.3	0.00	294	232	200	101	167	199	440	134	88	66	82	68	65	-0.007	5.14	0.32
466	76.664	80.691	0.16	0.17	2.31	70	0.45	1.82	69	-3.2	69	0.090	99	99	0.3	0.00	293	231	200	101	166	198	435	133	88	66	83	68	65	-0.007	5.15	0.33
468	76.994	81.039	0.16	0.17	2.30	70	0.38	1.82	69	-3.2	69	0.090	99	99	0.3	-0.04	293	230	200	101	166	198	428	132	85	66	83	68	65	-0.007	5.05	0.34
470	77.324	81.388	0.16	0.17	2.31	70	0.51	1.81	69	-3.1	69	0.090	99	99	0.3	0.00	292	229	200	100	165	197	423	132	85	66	83	68	65	-0.007	4.99	0.36
472	77.653	81.736	0.16	0.17	2.31	70	-0.01	1.82	69	-3.1	69	0.090	99	99	0.3	0.00	292	229	199	100	165	197	419	131	86	66	83	68	65	-0.007	5	0.37
474	77.984	82.086	0.17	0.17	2.30	70	0.1	1.81	69	-3.4	69	0.090	100	100	0.2	-0.04	291	228	199	100	165	197	416	130	88	65	82	68	65	-0.006	4.97	0.39
476	78.313	82.434	0.16	0.17	2.30	70	-0.04	1.82	69	-3.3	69	0.090	99	99	0.2	0.00	290	227	199	99	164	196	415	130	88	65	82	68	64	-0.006	5	0.41
478	78.643	82.782	0.16	0.17	2.31	70	0.17	1.82	69	-3.3	69	0.090	99	99	0.2	0.00	289	226	199	99	164	195	411	128	86	65	82	68	64	-0.006	4.98	0.41
480	78.972	83.130	0.16	0.17	2.29	70	0.47	1.82	69	-3.2	68	0.090	99	99	0.1	-0.07	288	225	198	98	163	194	406	128	85	65	82	68	65	-0.006	4.96	0.41
482	79.303	83.479	0.17	0.17	2.30	70	0.45	1.81	69	-3.4	68	0.090	100	99	0.1	0.00	289	225	198	98	163	195	397	127	86	65	82	68	65	-0.006	4.93	0.43
484	79.631	83.828	0.16	0.17	2.30	70	0.43	1.81	69	-3.4	69	0.080	105	105	0.1	0.00	288	224	198	98	163	194	387	126	87	65	82	68	65	-0.006	4.9	0.45
486	79.962	84.176	0.17	0.17	2.30	70	0.48	1.82	69	-3.2	68	0.090	100	99	0.1	0.00	287	223	197	97	163	193	375	126	88	65	82	68	65	-0.006	4.88	0.46
488	80.291	84.525	0.16	0.17	2.30	70	0.16	1.80	69	-3.3	68	0.090	99	99	0.1	-0.04	287	223	197	97	162	193	368	125	87	65	82	68	65	-0.005	4.88	0.48
490	80.621	84.873	0.16	0.17	2.31	70	0.3	1.81	69	-3.2	68	0.080	105	105	0.1	0.00	285	222	197	96	161	192	358	124	85	65	82	68	65	-0.005	4.85	0.48
492	80.951	85.221	0.16	0.17	2.30	70	0.31	1.83	69	-3.4	68	0.090	99	99	0.1	0.00	285	221	196	96	162	192	349	124	85	65	82	68	65	-0.005	4.78	0.49
494	81.281	85.570	0.17	0.17	2.30	70	0.3	1.81	69	-3.1	68	0.090	99	99	0.1	-0.04	284	221	196	96	161	192	342	123	87	65	82	67	65	-0.005	4.77	0.5
496	81.611	85.919	0.16	0.17	2.30	70	-0.03	1.82	69	-3.3	68	0.090	99	99	0.1	0.00	284	219	196	95	161	191	338	122	88	65	82	67	65	-0.004	4.71	0.52
498	81.940	86.267	0.16	0.17	2.29	70	0.04	1.81	69	-3.3	68	0.090	99	99	0.1	0.00	284	219	196	95	160	191	335	122	87	65	82	67	65	-0.004	4.7	0.51
500	82.270	86.616	0.16	0.17	2.31	70	0.14	1.82	69	-3.4	68	0.090	99	99	0.1	0.05	283	218	196	95	160	190	329	121	85	65	82	67	65	-0.004	4.65	0.51
Avg/Tot	82.270	86.616	0.16	0.17	2.28	73		1.80	70		78	0.089	100	100								138.2				67	81	67	72	-0.027		

Wood Heater Lab Data - ASTM E2780 / ASTM E2515

Manufacturer:	Hearth & Home	Equipment Numbers:	
Model:	Dauntless-CAT		
Tracking No.:	2389		
Project No.:	061WS104E		
Run #:	2		
Date:	10/2/19		

TRAIN 1 (First Hour emissions)

Sample Component	Reagent	Filter, Probe or Dish #	Weights		
			Final, mg	Tare, mg	Particulate, mg
B. Front filter catch	Filter	T181S	87.5	86.9	0.6
C. Rear filter catch	Filter				0.0
D. Probe catch*	Probe				0.0
E. Filter seals catch*	Seals				0.0

Sub-Total	Total Particulate, mg:	0.6

TRAIN 1 (Post First Hour Change-out)

Sample Component	Reagent	Filter, Probe or Dish #	Weights		
			Final, mg	Tare, mg	Particulate, mg
B. Front filter catch	Filter	T201AP	179.9	177.4	2.5
C. Rear filter catch	Filter				0.0
D. Probe catch*	Probe	7	114981.8	114981.8	0.0
E. Filter seals catch*	Seals	R883	3544.7	3544.4	0.3

Sub-Total	Total Particulate, mg:	2.8
Train 1 Aggregate	Total Particulate, mg:	**3.4**

TRAIN 2

Sample Component	Reagent	Filter, Probe or Dish #	Weights		
			Final, mg	Tare, mg	Particulate, mg
A. Front filter catch	Filter	T201BP	180.8	177.6	3.2
B. Rear filter catch	Filter				0.0
C. Probe catch*	Probe	15	114341.5	114341.5	0.0
D. Filter seals catch*	Seals	R884	3569.1	3568.8	0.3

Total Particulate, mg:	**3.5**

AMBIENT

Sample Component	Reagent	Filter # or Probe #	Weights		
			Final, mg	Tare, mg	Particulate, mg
A. Front filter catch*	Filter				0.0

Total Particulate, mg:	**0.0**

*Particulate catch that results in a negative number, is assumed to be zero for probes and seals, negative numbers for filters are assumed to be part of the seal weight.

Component	Equations:
A. Front filter catch	Final (mg) - Tare (mg) = Particulate, mg
B. Rear filter catch	Final (mg) - Tare (mg) = Particulate, mg
C. Probe catch	Final (mg) - Tare (mg) = Particulate, mg

Technician Signature: 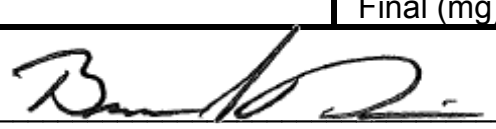

Wood Heater Test Results - ASTM E2780 / ASTM E2515

Manufacturer:	Hearth & Home
Model:	Dauntless-CAT
Project No.:	061WS104E
Tracking No.:	2389
Run:	2
Test Date:	10/02/19

Burn Rate	**0.96**	**kg/hr dry**
Average Tunnel Temperature	78	degrees Fahrenheit
Average Gas Velocity in Dilution Tunnel - vs	19.49	feet/second
Average Gas Flow Rate in Dilution Tunnel - Qsd	13074.7	dscf/hour
Average Delta p	0.089	inches H20
Total Time of Test	500	minutes

	AMBIENT		SAMPLE TRAIN 1		SAMPLE TRAIN 2		FIRST HOUR FILTER (TRAIN 1)	
Total Sample Volume - Vm	0.000	cubic feet	82.270	cubic feet	86.616	cubic feet	9.841	cubic feet
Average Gas Meter Temperature	72	degrees Fahrenheit	73	degrees Fahrenheit	70	degrees Fahrenheit	74	degrees Fahrenheit
Total Sample Volume (Standard Conditions) - Vmstd	0.000	dscf	80.293	dscf	84.589	dscf	9.578	dscf
Total Particulates - m_n	0	mg	3.4	mg	3.5	mg	0.6	mg
Particulate Concentration (dry-standard) - C_f/C_s	0.000000	grams/dscf	0.00004	grams/dscf	0.00004	grams/dscf	0.00006	grams/dscf
Total Particulate Emissions - E_T	0.00	grams	4.61	grams	4.51	grams	0.82	grams
Particulate Emission Rate	0.00	grams/hour	0.55	grams/hour	0.54	grams/hour	0.82	grams/hour
Emissions Factor			0.57	g/kg	0.56	g/kg	0.44	g/kg
Difference from Average Total Particulate Emissions			0.05	grams	0.05	grams		
	Dual Train Comparison Results Are Acceptable							

FINAL AVERAGE RESULTS

Complete Test Run		
Total Particulate Emissions - E_T	4.56	grams
Particulate Emission Rate	**0.55**	**grams/hour**
Emissions Factor	0.57	grams/kg
First Hour Emissions		
Total Particulate Emissions - E_T	0.82	grams
Particulate Emission Rate	0.82	grams/hour
Emissions Factor	0.44	grams/kg
7.5% of Average Total Particulate Emissions	0.34	grams

QUALITY CHECKS

Filter Temps < 90 °F	OK
Filter Face Velocity (47 mm)	OK
Dryer Exit Temp < 80F	OK
Leakage Rate	OK
Ambient Temp (55-90°F)	OK
Negative Probe Weight Eval.	OK
Pro-Rate Variation	OK

Technician Signature:

Wood Heater Efficiency Results - CSA B415.1

Manufacturer: Hearth & Home
Model: Dauntless-CAT
Date: 10/02/19
Run: 2
Control #: 061WS104E
Test Duration: 500
Output Category: II

Technician Signature:

Test Results in Accordance with CSA B415.1-09

	HHV Basis	LHV Basis
Overall Efficiency	79.2%	84.7%
Combustion Efficiency	95.9%	95.9%
Heat Transfer Efficiency	83%	88.3%

Output Rate (kJ/h)	15,361	14,572	**(Btu/h)**
Burn Rate (kg/h)	0.97	2.14	**(lb/h)**
Input (kJ/h)	19,400	18,403	**(Btu/h)**

Test Load Weight (dry kg)	8.10	17.85	**dry lb**
MC wet (%)	18.11482122		
MC dry (%)	22.12		
Particulate (g)	4.56		
CO (g)	492		
Test Duration (h)	8.33		

Emissions	Particulate	CO
g/MJ Output	0.04	3.84
g/kg Dry Fuel	0.56	60.72
g/h	0.55	59.01
lb/MM Btu Output	0.08	8.93

Air/Fuel Ratio (A/F)	12.32

VERSION: **2.2** **12/14/2009**

Adjunct to ASTM E XXXX Wood Heater Cordwood Test Method - May 10, 2017 Version

Cordwood Fuel Load Calculators - 12 lb/ft^3 Nominal Load Density

Core 45-65% of Total Load Weight, Remainder 35-55% of Total Load Weight

Values to be input manually

THIS DOCUMENT IS NOT AN ASTM STANDARD; IT IS UNDER CONSIDERATION WITHIN AN ASTM TECHNICAL COMMITTEE BUT HAS NOT RECEIVED ALL APPROVALS REQUIRED TO BECOME AN ASTM STANDARD. IT SHALL NOT BE REPRODUCED OR CIRCULATED OR QUOTED, IN WHOLE OR IN PART, OUTSIDE OF ASTM COMMITTEE ACTIVITIES EXCEPT WITH THE APPROVAL OF THE CHAIRMAN OF THE COMMITTEE HAVING JURISDICTION AND THE PRESIDENT OF THE SOCIETY. *COPYRIGHT ASTM, 100 BARR HARBOR DRIVE, WEST CONSHOHOCKEN, PA 19428. ALL RIGHTS RESERVED.*

For Usable Firebox Volumes up to 3.0 ft^3 - Low and Medium Fire

Nominal Required Load Density (wet basis)	12	lb/ft^3			
Usable Firebox Volume	1.82	ft^3			
Total Nom. Load Wt. Target	21.84	lb			
Total Load Wt. Allowable Range	20.75	to	22.93	lb	
Core Target Wt. Allowable Range	9.828	to	14.20	lb	
Remainder Load Wt. Allowable Range	7.64	to	12.01	lb	
					Mid-Point
Core Load Fuel Pc. Wt. Allowable Range	3.28	to	5.46	lb	4.37
Remainder Load Pc. Wt. Allowable Range	2.18	to	6.55	lb	4.37
	Pc. #				
Core Load Piece Wt. Actual	1	3.44	lb	In Range	
	2	3.48	lb	In Range	
	3	4.38	lb	In Range	
Core Load Total. Wt. Actual		11.30	lb	In Range	
	Pc. #				
Remainder Load Piece Wt.	1	4.17	lb	In Range	
(2 or 3 Pcs.)	2	3.88	lb	In Range	
	3	2.43	lb	In Range	
Remainder Load Piece Weight Ratio - Small/Large		58%		In Range	≤ 67%
Remainder Load Tot. Wt. Act		10.48	lb	In Range	
Total Load Wt. Actual		21.78	lb	In Range	
Core % of Total Wt.		52%		In Range	45-65%
Remainder % of Total Wt.		48%		In Range	35-55%
Actual Load % of Nominal Target		100%		In Range	95-105%
Actual Fuel Load Density		12.0	lb/ft^3		
Allowable Charcoal Bed Wt. Range (lb)	2.2	to	4.3		Mid-Point
Actual Charcoal Bed Wt.		2.9	lb	In Range	3.3
Actual Fuel Load Ending Wt.		0.1	lb	Valid Test	≥ 90%
Total Wt. of Fuel Burned During Test Run lb.		21.7	lb		

Fuel Piece Moisture Reading (%-dry basis)

1	2	3	Ave.		Pc. Wt. Dry Basis			
21.2	20.5	22.2	21.3	In Range	2.84	lb	1.29	kg
21	23.1	23	22.4	In Range	2.84	lb	1.29	kg
21.6	21.7	22.2	21.8	In Range	3.60	lb	1.63	kg
23.2	23	20.5	22.2	In Range	3.41	lb	1.55	kg
22.6	21.4	22.3	22.1	In Range	3.18	lb	1.44	kg
23.1	24.2	21.4	22.9	In Range	1.98	lb	0.90	kg
Total Load Ave. MC % (dry basis)			22.1	In Range				
Total Load Ave. MC % (wet basis)			18.1					
Total Test Load Weight (dry basis) →					17.84	lb	8.09	kg
Total Fuel Weight Burned During Test Run (dry basis)					17.7	lb	8.05	kg

OMNI-Test Laboratories, Inc.

Wood Heater Run Sheets

Client: Hearth & Home Project Number: 0061WS104E Run Number: 2
Model: Dauntless-Flexburn CAT Tracking Number: 2389 Date: 10/2/19
Test Crew: B Davis
OMNI Equipment ID numbers:

Wood Heater Supplemental Data

Start Time: 1630 Booth #: N/A

Stop Time: 2450

Stack Gas Leak Check:

Initial: good Final: good

Sample Train Leak Check:

A: 0.0 @ 8 "Hg
B: 0.0 @ 8 "Hg

Calibrations: Span Gas CO_2: 15.0 CO: 2.0

	Pre Test		Post Test	
	Zero	Span	Zero	Span 10/3/19
Time	See start of		0400	0400
CO_2	Run	1	0.04	15.04
CO			0.01	2.04

Air Velocity (ft/min): Initial: <50 Final: <50
Scale Audit (lbs): Initial: 10.0 Final: 10.0
Pitot Tube Leak Test: Initial: good Final: good
Stack Diameter (in): 6
Induced Draft: 0.0
% Smoke Capture: 100 %
Flue Pipe Cleaned Prior to First Test in Series:
Date: 9/30/19 Initials: AA

	Initial	Middle	Ending
P_b (in/Hg)	29.49		29.58
RH (%)	50		43
Ambient (°F)	78		65

Tunnel Traverse

Microtector Reading	dP (in H_2O)	T(°F)
	.080	88
	.090	88
	.080	88
	.076	88
	.076	88
	.080	88
	.084	88
	.078	88
Center:		
	.086	88

Tunnel Static Pressure (in H_2O):	
Beginning of Test	End of Test
-.281	-.281

Background Filter Volume: N/A

Technician Signature: [signature] Date: 10/3/19

OMNI-Test Laboratories, Inc.

Wood Heater Run Sheets

Client: Hearth & Home Project Number: 0061WS104E Run Number: 2
Model: Dauntless-Flexburn CAT Tracking Number: 2389 Date: 10/2/19
Test Crew: B Davis
OMNI Equipment ID numbers:

Wood Heater Run Notes

Air Control Settings

Primary:

Air Adjustment was set to 2 clicks from full closed.

Secondary:

Tertiary/Pilot:

Fan:

Preburn Notes

Time	Notes

Test Notes

Sketch test fuel configuration:

See photo

Start up procedures & Timeline:

Bypass: open until 45 seconds then closed
Fuel loaded by: 42 seconds
Door closed at: 45 seconds
Primary air: Primary air at that setting for entire test

Notes: Fan on medium entire test

Time	Notes
60	Changed front filter in train A.
8 hr 20 min	Test was stopped due to less than 1% of fuel load wt being consumed in 30 min

Technician Signature: Date: 10/31/19

Run 3

Non-Sampling High Burn 1-minute data

Results (Cold to Hot Cycle)

Wood Heater Test Data

7

Run: 3

Manufacturer: Hearth & Home
Model: Dauntless CAT
Tracking No.: 2389
Project No.: 061WS104E
Test Date: 05-Oct-19
Beginning Clock Time: 09:17

Total Sampling Time: 213 min
Recording Interval: 1 min
Background Sample Volume: _____ cubic feet

Meter Box Y Factor: 0.992 (1) 0.989 (2) _____ (Amb)

Barometric Pressure:	Begin	Middle	End	Average
	29.62		29.57	29.60 0

OMNI Equipment Numbers: _____

PM Control Modules: 371, 372
Dilution Tunnel MW(dry): 29.00 lb/lb-mole
Dilution Tunnel MW(wet): 28.78 lb/lb-mole
Dilution Tunnel H2O: 2.00 percent
Dilution Tunnel Static: -0.284 "H2O
Tunnel Area: 0.19635 ft2
Pitot Tube Cp: 0.99

Avg. Tunnel Velocity: #DIV/0! ft/sec.
Initial Tunnel Flow: #DIV/0! scfm
Average Tunnel Flow: #DIV/0! scfm
Post-Test Leak Check (1): _____ cfm @ _____ in. Hg
Post-Test Leak Check (2): _____ cfm @ _____ in. Hg
Average Test Piece Fuel Moisture: 21.61 Dry Basis %

Technician Signature:

Velocity Traverse Data

	Pt.1	Pt.2	Pt.3	Pt.4	Pt.5	Pt.6	Pt.7	Pt.8	Center	
Initial dP										"H2O
Temp:										°F

V_{strav} _____ ft/sec V_{scent} _____ ft/sec F_p _____

Elapsed Time (min)	Particulate Sampling Data: Gas Meter 1 (ft^3)	Gas Meter 2 (ft^3)	Sample Rate 1 (cfm)	Sample Rate 2 (cfm)	Orifice dH 1 ("H_2O)	Meter 1 Temp (°F)	Meter 1 Vacuum ("Hg)	Orifice dH 2 ("H_2O)	Meter 2 Temp (°F)	Meter 2 Vacuum ("Hg)	Dilution Tunnel (°F)	Dilution Tunnel Center dP	Pro. Rate 1	Pro. Rate 2	Fuel Weight (lb): Scale Reading	Weight Change	Temperature Data (°F): Firebox Top	Firebox Bottom	Firebox Back	Firebox Left	Firebox Right	Avg. Stove Surface	Catalyst Exit	Stack	Filter 1	Dryer Exit 1	Filter 2	Dryer Exit 2	Ambient	Stack Gas Data: Draft ("H_2O)	CO_2 (%)	CO (%)
0															3.7		68	67	66	67	67	67	67	68					66	0.014	0.11	0
1															3.7	0.00	69	67	67	67	67	67	66	107					66	-0.003	0.09	0
2															3.7	0.00	76	67	67	67	67	69	67	129					66	-0.009	0.24	0.01
3															3.7	0.00	96	68	68	68	67	73	67	175					66	-0.023	0.61	0.02
4															3.7	0.00	121	70	71	69	67	80	67	237					66	-0.033	2.34	0.06
5															3.7	0.00	144	73	76	71	67	86	68	269					66	-0.031	3.89	0.05
6															3.7	0.00	164	77	81	72	67	92	68	341					66	-0.048	5	0.06
7															3.7	0.00	194	82	87	74	67	101	68	449					66	-0.059	5.28	0.09
8															3.7	0.00	236	91	96	78	67	114	69	527					66	-0.066	7.04	0.13
9															3.7	-0.04	292	102	108	83	67	130	69	567					67	-0.067	9.2	0.23
10															3.6	-0.07	334	113	118	86	67	144	70	567					67	-0.066	10.96	0.38
11															3.5	-0.04	364	123	126	90	67	154	71	589					67	-0.070	10.88	0.34
12															3.4	-0.11	397	131	134	93	67	164	72	641					67	-0.073	10.57	0.4
13															3.4	-0.04	433	140	143	97	67	176	73	648					67	-0.074	11.36	0.59
14															3.2	-0.15	460	148	151	100	68	185	75	598					68	-0.068	12.24	0.58
15															3.1	-0.13	469	156	157	103	69	191	77	542					68	-0.063	12.28	0.49
16															2.8	-0.26	469	163	163	105	70	194	80	511					68	-0.062	10.44	0.3
17															2.6	-0.20	466	169	167	106	73	196	83	491					68	-0.058	8.53	0.3
18															2.4	-0.20	462	173	172	106	75	198	85	475					68	-0.059	7.63	0.34
19															2.2	-0.20	459	177	176	107	78	199	88	449					68	-0.055	7.52	0.36
20															2.0	-0.24	447	180	180	106	81	199	245	304					68	-0.035	7.37	0.39
21															1.8	-0.20	427	183	181	105	85	196	387	275					68	-0.033	5.55	0.33
22															1.6	-0.20	409	184	182	105	88	194	471	262					68	-0.033	5.13	0.64
23															1.5	-0.11	392	185	181	105	92	191	704	268					68	-0.037	5.29	0.73
24															1.4	-0.11	377	185	181	107	95	189	836	278					68	-0.038	5.95	0.6
25															1.3	-0.09	365	186	180	109	98	188	864	285					68	-0.039	7.74	0.32
26															1.2	-0.11	353	186	180	111	101	186	906	291					68	-0.040	8.19	0.28
27															1.1	-0.09	345	186	180	114	103	186	899	297					68	-0.040	8.35	0.33
28															6.3	5.20	341	186	180	117	106	186	855	295					68	-0.039	8.88	0.37
29															6.2	-0.07	336	187	180	119	108	186	839	292					68	-0.039	8.18	0.49
30															6.2	-0.04	332	187	180	121	111	186	867	296					68	-0.040	7.68	0.61
31															6.1	-0.09	329	187	180	122	113	186	875	299					68	-0.040	7.83	0.59
32															6.0	-0.11	328	188	181	124	116	187	868	301					68	-0.040	8.1	0.53
33															5.9	-0.09	330	188	181	126	118	189	850	300					69	-0.041	8.22	0.49
34															5.8	-0.07	334	189	182	127	121	191	839	299					68	-0.040	8.14	0.55
35															5.7	-0.13	335	190	183	129	123	192	875	302					69	-0.042	8.09	0.55

Wood Heater Test Data

7

Run: 3

Manufacturer: Hearth & Home
Model: Dauntless CAT
Tracking No.: 2389
Project No.: 061WS104E
Test Date: 05-Oct-19
Beginning Clock Time: 09:17

Total Sampling Time: 213 min
Recording Interval: 1 min
Background Sample Volume: _____ cubic feet

Meter Box Y Factor: 0.992 (1) 0.989 (2) _____ (Amb)

Barometric Pressure:	Begin	Middle	End	Average
	29.62		29.57	29.60 0

OMNI Equipment Numbers: _____

PM Control Modules: 371, 372
Dilution Tunnel MW(dry): 29.00 lb/lb-mole
Dilution Tunnel MW(wet): 28.78 lb/lb-mole
Dilution Tunnel H2O: 2.00 percent
Dilution Tunnel Static: -0.284 "H2O
Tunnel Area: 0.19635 ft2
Pitot Tube Cp: 0.99

Avg. Tunnel Velocity: #DIV/0! ft/sec.
Initial Tunnel Flow: #DIV/0! scfm
Average Tunnel Flow: #DIV/0! scfm
Post-Test Leak Check (1): _____ cfm @ _____ in. Hg
Post-Test Leak Check (2): _____ cfm @ _____ in. Hg
Average Test Piece Fuel Moisture: 21.61 Dry Basis %

Technician Signature: 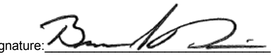

Velocity Traverse Data

	Pt.1	Pt.2	Pt.3	Pt.4	Pt.5	Pt.6	Pt.7	Pt.8	Center	
Initial dP										"H2O
Temp:										°F

V_{strav} _____ ft/sec V_{scent} _____ ft/sec F_p _____

Elapsed Time (min)	Particulate Sampling Data: Gas Meter 1 (ft^3)	Gas Meter 2 (ft^3)	Sample Rate 1 (cfm)	Sample Rate 2 (cfm)	Orifice dH 1 ("H_2O)	Meter 1 Temp (°F)	Meter 1 Vacuum ("Hg)	Orifice dH 2 ("H_2O)	Meter 2 Temp (°F)	Meter 2 Vacuum ("Hg)	Dilution Tunnel (°F)	Dilution Tunnel Center dP	Pro. Rate 1	Pro. Rate 2	Fuel Weight (lb): Scale Reading	Weight Change	Temperature Data (°F): Firebox Top	Firebox Bottom	Firebox Back	Firebox Left	Firebox Right	Avg. Stove Surface	Catalyst Exit	Stack	Filter 1	Dryer Exit 1	Filter 2	Dryer Exit 2	Ambient	Stack Gas Data: Draft ("H_2O)	CO_2 (%)	CO (%)
36															5.6	-0.11	339	191	184	128	126	194	951	308					69	-0.040	8.12	0.51
37															5.5	-0.11	336	193	185	132	128	195	1222	325					68	-0.046	9.56	0.55
38															5.4	-0.09	332	193	185	135	131	195	1276	337					68	-0.047	10.07	1.04
39															5.3	-0.11	328	194	186	138	134	196	1349	349					69	-0.048	11.15	0.77
40															5.2	-0.09	325	195	186	142	136	197	1370	359					69	-0.049	12.17	0.79
41															5.1	-0.11	323	195	186	146	139	198	1277	363					69	-0.049	12.43	1.11
42															5.0	-0.09	321	196	186	149	141	199	1227	364					69	-0.049	12.01	0.98
43															4.9	-0.07	320	198	187	152	144	200	1204	362					69	-0.048	11.73	0.49
44															4.7	-0.20	320	199	187	154	146	201	1226	362					69	-0.049	11.4	0.28
45															4.6	-0.13	320	200	188	157	149	203	1230	365					69	-0.049	11.38	0.19
46															4.5	-0.15	323	201	189	159	152	205	1194	366					69	-0.048	11.71	0.11
47															4.3	-0.15	328	203	190	161	154	207	1183	367					69	-0.049	11.26	0.17
48															4.2	-0.11	335	206	192	163	156	210	1186	369					69	-0.049	10.79	0.22
49															4.1	-0.13	343	208	194	165	159	214	1193	369					69	-0.049	11.06	0.29
50															3.9	-0.11	349	212	197	166	161	217	1186	370					70	-0.048	11.31	0.31
51															3.9	-0.09	357	216	199	168	164	221	1153	371					70	-0.048	11.44	0.32
52															3.7	-0.15	364	220	202	169	166	224	1147	368					70	-0.048	11.29	0.35
53															3.6	-0.11	368	224	204	170	168	227	1164	368					69	-0.048	11.03	0.37
54															3.5	-0.09	370	228	206	171	170	229	1143	368					69	-0.048	10.81	0.24
55															3.4	-0.11	374	231	208	171	172	231	1095	365					69	-0.047	10.31	0.24
56															3.3	-0.09	380	235	210	172	174	234	1054	361					70	-0.047	9.3	0.36
57															3.2	-0.11	385	238	212	172	176	237	1023	357					70	-0.046	8.86	0.36
58															3.1	-0.09	390	241	215	171	178	239	1014	352					69	-0.046	8.38	0.38
59															3.0	-0.15	391	243	217	170	180	240	1029	352					70	-0.046	8.06	0.4
60															2.9	-0.04	390	245	219	170	182	241	1047	354					70	-0.046	7.99	0.42
61															2.8	-0.11	391	247	220	169	184	242	1041	354					70	-0.046	8.43	0.29
62															2.7	-0.11	391	248	222	169	186	243	1027	354					70	-0.046	8.66	0.23
63															2.6	-0.04	390	250	224	168	187	244	998	352					70	-0.045	8.42	0.23
64															2.6	-0.09	385	250	225	166	188	243	1054	283					70	-0.035	7.98	0.24
65															2.5	-0.07	370	251	224	166	190	240	1382	335					70	-0.048	6.46	0.24
66															2.4	-0.09	358	251	223	168	191	238	1476	358					70	-0.050	8.17	0.41
67															2.4	-0.04	348	251	222	171	193	237	1521	370					71	-0.051	12.25	0.51
68															2.3	-0.07	339	249	221	174	194	235	1547	381					70	-0.053	13.46	1.01
69															2.2	-0.04	332	248	221	176	196	235	1562	389					70	-0.053	14.1	1.52
70															2.2	-0.09	325	247	221	178	197	234	1587	392					70	-0.053	14.34	1.7
71															2.1	-0.07	318	246	220	180	198	232	1597	398					70	-0.054	14.07	1.41

Wood Heater Test Data

7

Run: 3

Manufacturer: Hearth & Home
Model: Dauntless CAT
Tracking No.: 2389
Project No.: 061WS104E
Test Date: 05-Oct-19
Beginning Clock Time: 09:17

Total Sampling Time: 213 min
Recording Interval: 1 min
Background Sample Volume: _____ cubic feet

Meter Box Y Factor: 0.992 (1) 0.989 (2) _____ (Amb)

Barometric Pressure:	Begin	Middle	End	Average
	29.62		29.57	29.60 0

OMNI Equipment Numbers: _____

PM Control Modules: 371, 372
Dilution Tunnel MW(dry): 29.00 lb/lb-mole
Dilution Tunnel MW(wet): 28.78 lb/lb-mole
Dilution Tunnel H2O: 2.00 percent
Dilution Tunnel Static: -0.284 "H2O
Tunnel Area: 0.19635 ft2
Pitot Tube Cp: 0.99

Avg. Tunnel Velocity: #DIV/0! ft/sec.
Initial Tunnel Flow: #DIV/0! scfm
Average Tunnel Flow: #DIV/0! scfm
Post-Test Leak Check (1): _____ cfm @ _____ in. Hg
Post-Test Leak Check (2): _____ cfm @ _____ in. Hg
Average Test Piece Fuel Moisture: 21.61 Dry Basis %

Technician Signature: _____

Velocity Traverse Data

	Pt.1	Pt.2	Pt.3	Pt.4	Pt.5	Pt.6	Pt.7	Pt.8	Center	
Initial dP										"H2O
Temp:										°F

V_{strav} _____ ft/sec V_{scent} _____ ft/sec F_p _____

Elapsed Time (min)	Particulate Sampling Data: Gas Meter 1 (ft^3)	Gas Meter 2 (ft^3)	Sample Rate 1 (cfm)	Sample Rate 2 (cfm)	Orifice dH 1 ("H_2O)	Meter 1 Temp (°F)	Meter 1 Vacuum ("Hg)	Orifice dH 2 ("H_2O)	Meter 2 Temp (°F)	Meter 2 Vacuum ("Hg)	Dilution Tunnel (°F)	Dilution Tunnel Center dP	Pro. Rate 1	Pro. Rate 2	Fuel Weight (lb): Scale Reading	Weight Change	Temperature Data (°F): Firebox Top	Firebox Bottom	Firebox Back	Firebox Left	Firebox Right	Avg. Stove Surface	Catalyst Exit	Stack	Filter 1	Dryer Exit 1	Filter 2	Dryer Exit 2	Ambient	Stack Gas Data: Draft ("H_2O)	CO_2 (%)	CO (%)
72															18.9	16.81	312	244	219	182	199	231	1605	401					70	-0.054	13.9	1.33
73															18.3	-0.55	307	242	219	185	201	231	1617	404					70	-0.055	14.03	1.22
74															18.3	-0.09	303	240	218	188	201	230	1626	409					70	-0.055	14.38	1.1
75															18.1	-0.15	299	239	219	189	202	230	1637	412					70	-0.056	14.64	1.02
76															17.9	-0.15	296	237	218	191	204	229	1626	415					70	-0.055	14.82	0.81
77															17.8	-0.15	293	235	218	193	205	229	1544	413					70	-0.055	15.06	0.86
78															17.6	-0.15	291	233	218	195	206	229	1603	417					70	-0.056	14.47	0.34
79															17.5	-0.15	288	232	218	197	208	229	1583	418					70	-0.056	14.23	0.24
80															17.4	-0.13	286	231	218	199	209	229	1577	419					70	-0.056	14.64	0.36
81															17.2	-0.15	285	230	219	201	211	229	1556	419					70	-0.056	14.83	0.31
82															17.0	-0.15	283	229	219	204	213	230	1585	421					70	-0.056	14.71	0.16
83															16.9	-0.15	282	228	220	205	214	230	1567	422					70	-0.056	14.81	0.16
84															16.7	-0.15	283	227	220	207	215	230	1546	421					70	-0.056	14.83	0.15
85															16.6	-0.09	282	227	221	208	217	231	1552	420					70	-0.056	14.62	0.09
86															16.5	-0.15	282	226	222	210	219	232	1569	421					70	-0.056	14.12	0.04
87															16.3	-0.15	281	225	223	212	221	232	1564	419					71	-0.056	14.11	0.06
88															16.2	-0.13	281	225	223	212	222	233	1555	420					70	-0.056	13.86	0.05
89															16.1	-0.11	281	225	224	214	224	234	1559	421					70	-0.056	13.62	0.04
90															15.9	-0.15	281	225	225	214	226	234	1551	421					70	-0.056	13.56	0.05
91															15.8	-0.15	281	225	225	215	228	235	1539	420					71	-0.056	13.51	0.07
92															15.7	-0.13	281	225	226	215	230	235	1527	420					70	-0.056	13.43	0.06
93															15.5	-0.11	281	226	226	215	231	236	1524	419					71	-0.056	13.37	0.03
94															15.4	-0.15	280	227	227	215	234	237	1515	419					71	-0.056	13.29	0.01
95															15.2	-0.15	281	228	228	215	235	237	1507	419					70	-0.056	13.2	0.01
96															15.1	-0.09	281	229	228	216	238	238	1499	418					71	-0.056	13.12	0.01
97															15.0	-0.15	281	231	229	216	241	240	1503	418					70	-0.056	12.87	0.01
98															14.9	-0.09	281	232	229	215	242	240	1509	418					71	-0.056	12.96	0.01
99															14.8	-0.15	282	234	230	216	245	241	1518	419					71	-0.056	13.09	0.01
100															14.6	-0.11	283	235	230	216	247	242	1529	420					71	-0.056	13.26	0.01
101															14.5	-0.15	284	237	231	217	249	244	1536	421					71	-0.056	13.43	0.01
102															14.4	-0.09	288	238	233	218	251	246	1539	421					71	-0.056	13.53	0.01
103															14.2	-0.15	291	240	234	218	253	247	1543	422					71	-0.056	13.65	0.02
104															14.2	-0.09	294	241	236	219	255	249	1548	423					71	-0.056	13.63	0.02
105															14.0	-0.15	296	242	237	220	256	250	1555	424					71	-0.056	13.59	0.02
106															13.9	-0.11	299	243	239	221	258	252	1567	425					71	-0.057	13.57	0.02
107															13.7	-0.15	301	243	241	222	260	253	1577	426					71	-0.057	13.64	0.03

Wood Heater Test Data

7

Run: 3

Manufacturer: Hearth & Home
Model: Dauntless CAT
Tracking No.: 2389
Project No.: 061WS104E
Test Date: 05-Oct-19
Beginning Clock Time: 09:17

Total Sampling Time: 213 min
Recording Interval: 1 min
Background Sample Volume: _____ cubic feet

Meter Box Y Factor: 0.992 (1) 0.989 (2) _____ (Amb)

Barometric Pressure:	Begin	Middle	End	Average
	29.62		29.57	29.60 0

OMNI Equipment Numbers: _____

PM Control Modules: 371, 372
Dilution Tunnel MW(dry): 29.00 lb/lb-mole
Dilution Tunnel MW(wet): 28.78 lb/lb-mole
Dilution Tunnel H2O: 2.00 percent
Dilution Tunnel Static: -0.284 "H2O
Tunnel Area: 0.19635 ft2
Pitot Tube Cp: 0.99

Avg. Tunnel Velocity: #DIV/0! ft/sec.
Initial Tunnel Flow: #DIV/0! scfm
Average Tunnel Flow: #DIV/0! scfm
Post-Test Leak Check (1): _____ cfm @ _____ in. Hg
Post-Test Leak Check (2): _____ cfm @ _____ in. Hg
Average Test Piece Fuel Moisture: 21.61 Dry Basis %

Technician Signature:

Velocity Traverse Data

	Pt.1	Pt.2	Pt.3	Pt.4	Pt.5	Pt.6	Pt.7	Pt.8	Center	
Initial dP										"H2O
Temp:										°F

V_{strav} _____ ft/sec V_{scent} _____ ft/sec F_p _____

Elapsed Time (min)	Particulate Sampling Data: Gas Meter 1 (ft^3)	Gas Meter 2 (ft^3)	Sample Rate 1 (cfm)	Sample Rate 2 (cfm)	Orifice dH 1 ("H_2O)	Meter 1 Temp (°F)	Meter 1 Vacuum ("Hg)	Orifice dH 2 ("H_2O)	Meter 2 Temp (°F)	Meter 2 Vacuum ("Hg)	Dilution Tunnel (°F)	Dilution Tunnel Center dP	Pro. Rate 1	Pro. Rate 2	Fuel Weight (lb): Scale Reading	Weight Change	Temperature Data (°F): Firebox Top	Firebox Bottom	Firebox Back	Firebox Left	Firebox Right	Avg. Stove Surface	Catalyst Exit	Stack	Filter 1	Dryer Exit 1	Filter 2	Dryer Exit 2	Ambient	Stack Gas Data: Draft ("H_2O)	CO_2 (%)	CO (%)
108															13.6	-0.09	304	244	242	223	261	255	1583	428					71	-0.056	13.74	0.05
109															13.5	-0.15	306	244	244	224	263	256	1590	429					71	-0.057	13.85	0.08
110															13.4	-0.09	308	245	245	225	265	258	1601	432					71	-0.057	13.92	0.1
111															13.3	-0.15	311	245	247	226	267	259	1600	433					71	-0.057	14.01	0.14
112															13.1	-0.11	314	245	248	227	269	261	1600	432					71	-0.057	14.07	0.17
113															13.0	-0.15	318	246	250	228	269	262	1607	432					72	-0.057	14.22	0.14
114															12.9	-0.09	322	246	252	229	270	264	1604	432					71	-0.057	14.31	0.11
115															12.7	-0.15	325	246	253	230	273	265	1599	431					71	-0.058	14.28	0.09
116															12.7	-0.09	328	246	255	231	274	267	1612	432					72	-0.058	14.24	0.1
117															12.5	-0.15	331	247	256	232	276	268	1626	433					72	-0.058	14.24	0.08
118															12.3	-0.15	334	248	257	234	276	270	1658	437					72	-0.058	14.38	0.1
119															12.2	-0.15	338	248	259	235	277	271	1692	437					72	-0.058	14.71	0.25
120															12.1	-0.09	343	249	261	237	279	274	1711	440					72	-0.058	15.15	0.65
121															12.0	-0.15	346	250	262	238	281	275	1677	438					72	-0.057	15.49	1.06
122															11.8	-0.11	352	251	264	239	282	278	1652	436					72	-0.058	15.45	0.66
123															11.7	-0.15	356	253	265	240	282	279	1639	437					72	-0.058	15.02	0.42
124															11.6	-0.09	358	254	266	240	283	280	1626	436					72	-0.058	14.67	0.29
125															11.4	-0.15	359	255	268	241	285	282	1615	437					72	-0.058	14.63	0.22
126															11.3	-0.15	361	256	270	242	286	283	1589	435					72	-0.058	14.56	0.11
127															11.2	-0.09	365	256	271	242	288	284	1608	435					72	-0.058	14.36	0.06
128															11.0	-0.15	369	258	274	243	289	287	1605	435					72	-0.058	14.72	0.11
129															10.9	-0.15	373	259	276	243	289	288	1591	436					72	-0.058	15	0.16
130															10.7	-0.15	377	260	279	244	291	290	1565	435					72	-0.058	15.02	0.14
131															10.7	-0.09	380	261	282	244	292	292	1546	434					72	-0.057	14.9	0.09
132															10.5	-0.15	383	262	285	244	293	293	1527	434					72	-0.057	14.74	0.05
133															10.4	-0.11	387	263	287	244	294	295	1523	434					72	-0.057	14.51	0.02
134															10.3	-0.09	390	265	290	243	295	297	1517	434					72	-0.057	14.36	0.01
135															10.1	-0.15	393	265	292	243	296	298	1514	433					72	-0.057	14.25	0.01
136															10.0	-0.15	397	267	295	242	296	299	1515	433					72	-0.057	14.14	0.01
137															9.9	-0.13	398	268	297	241	298	300	1516	431					72	-0.057	14.05	0.01
138															9.7	-0.11	402	269	299	241	298	302	1513	430					72	-0.057	13.96	0.02
139															9.6	-0.11	404	270	301	240	299	303	1495	429					72	-0.057	13.86	0.03
140															9.5	-0.13	407	271	303	240	301	304	1484	429					72	-0.057	13.7	0.03
141															9.4	-0.11	409	273	305	240	302	306	1474	428					72	-0.057	13.49	0.02
142															9.2	-0.15	412	274	306	239	303	307	1461	427					73	-0.056	13.3	0.01
143															9.2	-0.04	414	275	308	237	304	308	1445	427					72	-0.056	13.09	0.01

Wood Heater Test Data

7

Run: 3

Manufacturer: Hearth & Home
Model: Dauntless CAT
Tracking No.: 2389
Project No.: 061WS104E
Test Date: 05-Oct-19
Beginning Clock Time: 09:17

Total Sampling Time: 213 min
Recording Interval: 1 min
Background Sample Volume: _____ cubic feet

Meter Box Y Factor: 0.992 (1) 0.989 (2) _____ (Amb)

Barometric Pressure:	Begin	Middle	End	Average
	29.62		29.57	29.60 0

OMNI Equipment Numbers: _____

PM Control Modules: 371, 372
Dilution Tunnel MW(dry): 29.00 lb/lb-mole
Dilution Tunnel MW(wet): 28.78 lb/lb-mole
Dilution Tunnel H2O: 2.00 percent
Dilution Tunnel Static: -0.284 "H2O
Tunnel Area: 0.19635 ft2
Pitot Tube Cp: 0.99

Avg. Tunnel Velocity: #DIV/0! ft/sec.
Initial Tunnel Flow: #DIV/0! scfm
Average Tunnel Flow: #DIV/0! scfm
Post-Test Leak Check (1): _____ cfm @ _____ in. Hg
Post-Test Leak Check (2): _____ cfm @ _____ in. Hg
Average Test Piece Fuel Moisture: 21.61 Dry Basis %

Technician Signature:

Velocity Traverse Data

	Pt.1	Pt.2	Pt.3	Pt.4	Pt.5	Pt.6	Pt.7	Pt.8	Center	
Initial dP										"H2O
Temp:										°F

V_{strav} _____ ft/sec V_{scent} _____ ft/sec F_p _____

Elapsed Time (min)	Particulate Sampling Data: Gas Meter 1 (ft^3)	Gas Meter 2 (ft^3)	Sample Rate 1 (cfm)	Sample Rate 2 (cfm)	Orifice dH 1 ("H_2O)	Meter 1 Temp (°F)	Meter 1 Vacuum ("Hg)	Orifice dH 2 ("H_2O)	Meter 2 Temp (°F)	Meter 2 Vacuum ("Hg)	Dilution Tunnel (°F)	Dilution Tunnel Center dP	Pro. Rate 1	Pro. Rate 2	Fuel Weight (lb): Scale Reading	Weight Change	Temperature Data (°F): Firebox Top	Firebox Bottom	Firebox Back	Firebox Left	Firebox Right	Avg. Stove Surface	Catalyst Exit	Stack	Filter 1	Dryer Exit 1	Filter 2	Dryer Exit 2	Ambient	Stack Gas Data: Draft ("H_2O)	CO_2 (%)	CO (%)
144															9.0	-0.20	418	276	309	236	305	309	1431	426					73	-0.056	12.9	0
145															8.9	-0.11	419	277	311	235	305	309	1415	425					72	-0.056	12.69	0
146															8.8	-0.09	421	279	313	235	306	311	1398	424					72	-0.056	12.48	0
147															8.6	-0.15	423	280	314	233	307	311	1389	424					72	-0.055	12.28	0
148															8.6	-0.09	425	282	316	232	307	312	1378	423					72	-0.056	12.14	0
149															8.4	-0.11	427	283	317	232	308	313	1369	422					73	-0.055	12.01	0
150															8.3	-0.15	429	284	318	231	308	314	1358	420					73	-0.056	11.84	0
151															8.2	-0.09	430	285	320	230	308	315	1349	420					73	-0.054	11.66	0
152															8.1	-0.11	431	286	322	228	310	315	1337	419					73	-0.054	11.51	0
153															8.0	-0.09	431	287	323	227	311	316	1330	416					73	-0.054	11.42	0.01
154															7.9	-0.11	433	289	325	226	312	317	1327	417					74	-0.054	11.35	0.02
155															7.8	-0.09	433	290	327	225	311	317	1326	416					73	-0.054	11.34	0.03
156															7.7	-0.11	434	291	329	225	312	318	1323	415					73	-0.054	11.41	0.02
157															7.5	-0.15	435	292	331	224	312	319	1335	415					74	-0.053	11.47	0.03
158															7.5	-0.09	436	293	333	223	312	319	1346	415					73	-0.053	11.62	0.03
159															7.4	-0.07	437	294	335	222	312	320	1352	415					73	-0.054	11.91	0.03
160															7.3	-0.13	438	295	337	221	313	321	1355	415					74	-0.054	12.07	0.03
161															7.1	-0.11	439	296	339	221	313	322	1357	415					73	-0.053	12.05	0.03
162															7.1	-0.09	441	296	341	221	313	322	1362	415					74	-0.053	12.03	0.04
163															6.9	-0.11	443	297	343	220	314	323	1363	415					74	-0.053	12.07	0.04
164															6.9	-0.09	446	298	344	220	314	324	1369	416					74	-0.053	12.15	0.05
165															6.7	-0.11	448	298	346	220	313	325	1377	415					74	-0.053	12.35	0.04
166															6.6	-0.11	449	298	348	219	314	326	1385	417					74	-0.053	12.51	0.04
167															6.6	-0.04	451	299	351	220	315	327	1397	417					74	-0.053	12.6	0.06
168															6.4	-0.15	452	300	353	220	315	328	1445	418					73	-0.054	12.72	0.09
169															6.4	-0.09	454	300	355	220	315	329	1506	422					73	-0.054	13.03	0.15
170															6.2	-0.11	458	301	358	221	315	331	1497	423					73	-0.055	13.69	0.32
171															6.2	-0.09	460	302	360	222	315	332	1411	424					73	-0.054	14.08	0.83
172															6.0	-0.15	463	303	362	222	314	333	1380	421					73	-0.054	13.46	0.34
173															5.9	-0.11	463	303	364	222	314	333	1374	419					74	-0.053	12.9	0.11
174															5.8	-0.09	462	303	365	221	314	333	1387	419					74	-0.053	12.73	0.03
175															5.6	-0.15	461	303	366	222	315	333	1390	420					74	-0.053	12.8	0.01
176															5.6	-0.09	458	304	367	222	315	333	1396	420					74	-0.054	12.71	0
177															5.4	-0.11	457	304	367	222	315	333	1408	419					74	-0.053	12.53	0.01
178															5.3	-0.15	454	304	369	222	315	333	1420	419					74	-0.053	12.42	0.01
179															5.2	-0.09	451	304	369	222	315	332	1458	421					74	-0.054	12.29	0.02

Wood Heater Test Data

7

Run: 3

Manufacturer: Hearth & Home
Model: Dauntless CAT
Tracking No.: 2389
Project No.: 061WS104E
Test Date: 05-Oct-19
Beginning Clock Time: 09:17

Total Sampling Time: 213 min
Recording Interval: 1 min
Background Sample Volume: _____ cubic feet

Meter Box Y Factor: 0.992 (1) 0.989 (2) _____ (Amb)

Barometric Pressure:	Begin	Middle	End	Average
	29.62		29.57	29.60 0

OMNI Equipment Numbers: _____

PM Control Modules: 371, 372
Dilution Tunnel MW(dry): 29.00 lb/lb-mole
Dilution Tunnel MW(wet): 28.78 lb/lb-mole
Dilution Tunnel H2O: 2.00 percent
Dilution Tunnel Static: -0.284 "H2O
Tunnel Area: 0.19635 ft2
Pitot Tube Cp: 0.99

Avg. Tunnel Velocity: #DIV/0! ft/sec.
Initial Tunnel Flow: #DIV/0! scfm
Average Tunnel Flow: #DIV/0! scfm
Post-Test Leak Check (1): _____ cfm @ _____ in. Hg
Post-Test Leak Check (2): _____ cfm @ _____ in. Hg
Average Test Piece Fuel Moisture: 21.61 Dry Basis %

Technician Signature:

Velocity Traverse Data

	Pt.1	Pt.2	Pt.3	Pt.4	Pt.5	Pt.6	Pt.7	Pt.8	Center	
Initial dP										"H2O
Temp:										°F

V_{strav} _____ ft/sec V_{scent} _____ ft/sec F_p _____

Elapsed Time (min)	Particulate Sampling Data: Gas Meter 1 (ft^3)	Gas Meter 2 (ft^3)	Sample Rate 1 (cfm)	Sample Rate 2 (cfm)	Orifice dH 1 ("H_2O)	Meter 1 Temp (°F)	Meter 1 Vacuum ("Hg)	Orifice dH 2 ("H_2O)	Meter 2 Temp (°F)	Meter 2 Vacuum ("Hg)	Dilution Tunnel (°F)	Dilution Tunnel Center dP	Pro. Rate 1	Pro. Rate 2	Fuel Weight (lb): Scale Reading	Weight Change	Temperature Data (°F): Firebox Top	Firebox Bottom	Firebox Back	Firebox Left	Firebox Right	Avg. Stove Surface	Catalyst Exit	Stack	Filter 1	Dryer Exit 1	Filter 2	Dryer Exit 2	Ambient	Stack Gas Data: Draft ("H_2O)	CO_2 (%)	CO (%)
180															5.1	-0.11	453	304	369	223	315	333	1507	423					74	-0.055	12.3	0.04
181															5.0	-0.09	474	306	370	224	315	338	1530	429					74	-0.056	12.87	0.07
182															4.9	-0.11	500	310	372	226	316	345	1492	433					74	-0.057	14.57	0.42
183															4.8	-0.09	522	315	375	227	316	351	1435	436					74	-0.056	15.01	1.23
184															4.7	-0.11	543	321	378	228	317	357	1373	435					74	-0.056	14.6	1.42
185															4.6	-0.11	560	327	381	228	317	363	1324	432					74	-0.055	14.08	1.33
186															4.5	-0.09	573	333	384	228	316	367	1274	427					74	-0.053	13.64	1.22
187															4.4	-0.11	581	340	386	227	316	370	1225	421					74	-0.053	13.37	1.13
188															4.3	-0.09	583	346	388	225	315	371	1177	416					74	-0.053	12.9	0.99
189															4.1	-0.15	586	352	389	223	314	373	1142	410					75	-0.053	12.17	0.82
190															4.0	-0.15	583	358	390	219	315	373	1113	404					75	-0.051	11.55	0.66
191															3.8	-0.15	583	363	391	217	314	374	1094	400					75	-0.051	11.17	0.57
192															3.7	-0.13	578	367	392	214	313	373	1093	396					74	-0.051	10.86	0.53
193															3.6	-0.11	571	370	392	213	313	372	1085	393					75	-0.050	10.48	0.53
194															3.4	-0.15	566	373	392	211	312	371	1097	390					74	-0.050	10.34	0.55
195															3.4	-0.09	561	376	392	209	311	370	1100	388					74	-0.050	10.18	0.58
196															3.2	-0.15	555	378	391	207	309	368	1102	385					75	-0.049	10	0.6
197															3.1	-0.11	552	381	390	205	308	367	1093	382					75	-0.049	9.76	0.68
198															3.0	-0.09	547	383	389	204	307	366	1085	381					76	-0.049	9.53	0.68
199															3.0	-0.04	541	385	388	202	307	365	1093	381					76	-0.049	9.58	0.68
200															2.8	-0.11	536	386	387	201	306	363	1122	383					76	-0.050	9.81	0.74
201															2.8	-0.09	532	387	386	200	305	362	1136	384					75	-0.049	10.52	0.53
202															2.6	-0.11	529	389	384	199	305	361	1153	384					76	-0.049	11.19	0.33
203															2.6	-0.04	524	390	383	198	304	360	1174	386					75	-0.050	11.41	0.25
204															2.5	-0.11	519	391	382	198	302	358	1200	387					74	-0.049	11.53	0.23
205															2.4	-0.09	515	392	380	197	301	357	1198	388					75	-0.049	11.56	0.24
206															2.3	-0.07																
207															2.3	-0.09																
208															2.1	-0.11																
209															2.1	-0.04																
210															2.0	-0.09																
211															1.9	-0.11																
212															1.9	-0.04																
213															1.7	-0.11																
Avg/Tot	0.000	0.000	0.00	#DIV/0!	#DIV/0!	#DIV/0!		#DIV/0!	#DIV/0!		#DIV/0!	#DIV/0!	#DIV/0!	#DIV/0!								67.0				#DIV/0!	#DIV/0!	#DIV/0!	71	-0.052		

Wood Heater Test Results - ASTM E2780 / ASTM E2515

Manufacturer: Hearth & Home
Model: Dauntless CAT
Project No.: 061WS104E
Tracking No.: 2389
Run: 3
Test Date: 10/05/19

Burn Rate	**2.66 kg/hr dry**
Total Time of Test	141 minutes

	AMBIENT	SAMPLE TRAIN 1	SAMPLE TRAIN 2	FIRST HOUR FILTER (TRAIN 1)
	#DIV/0!			

FINAL AVERAGE RESULTS

QUALITY CHECKS

Ambient Temp (55-90°F)	OK

Technician Signature:

Adjunct to ASTM E XXXX Wood Heater Cordwood Test Method - May 10, 2017 Version
Cordwood Fuel Load Calculators - 10 lb/ft^3 Nominal Load Density
Core 45-65% of Total Load Weight, Remainder 35-55% of Total Load Weight
Values to be input manually

THIS DOCUMENT IS NOT AN ASTM STANDARD; IT IS UNDER CONSIDERATION WITHIN AN ASTM TECHNICAL COMMITTEE BUT HAS NOT RECEIVED ALL APPROVALS REQUIRED TO BECOME AN ASTM STANDARD. IT SHALL NOT BE REPRODUCED OR CIRCULATED OR QUOTED, IN WHOLE OR IN PART, OUTSIDE OF ASTM COMMITTEE ACTIVITIES EXCEPT WITH THE APPROVAL OF THE CHAIRMAN OF THE COMMITTEE HAVING JURISDICTION AND THE PRESIDENT OF THE SOCIETY. *COPYRIGHT ASTM, 100 BARR HARBOR DRIVE, WEST CONSHOHOCKEN, PA 19428. ALL RIGHTS RESERVED.*

For All Usable Firebox Volumes - High Fire Test Only

Nominal Required Load Density (wet basis)	10	lb/ft^3			
Usable Firebox Volume	1.82	ft^3			
Total Nom. Load Wt. Target	18.20	lb			
Total Load Wt. Allowable Range	17.30	to	19.10	lb	
Core Target Wt. Allowable Range	8.20	to	11.80	lb	
Remainder Load Wt. Allowable Range	6.40	to	10.00	lb	
					Mid-Point
Core Load Pc. Wt. Allowable Range	2.70	to	4.60	lb	3.65
Remainder Load Pc. Wt. Allowable Range	1.80	to	10.00	lb	5.90
	Pc. #				
Core Load Piece Wt. Actual	1	3.67	lb	In Range	
	2	3.45	lb	In Range	
	3	3.85	lb	In Range	
Core Load Total. Wt. Actual		10.97	lb	In Range	
	Pc. #				
Remainder Load Piece Wt.	1	4.60	lb	In Range	
(1 to 3 Pcs.)	2	3.34	lb	In Range	
	3		lb	NA	
Remainder Load Tot. Wt. Act		7.94	lb	In Range	
Total Load Wt. Actual		18.91	lb	In Range	
Core % of Total Wt.		58%		In Range	45-65%
Remainder % of Total Wt.		42%		In Range	35-55%
Actual Load % of Nominal Target		104%		In Range	95-105%
Actual Fuel Load Density		10.4	lb/ft^3		
Kindling and Start-up Fuel					
Maximim Kindling Wt. (20% of Tot. Load Wt.)		3.78	lb		
Actual Kindling Wt.		3.68	lb	In Range	19.5%
Maximum Start-up Fuel Wt. (30% of Tot. Load Wt.)		5.67	lb		
Actual Start-up Fuel Wt.		5.34	lb	In Range	28.2%
Allowable Residual Start-up Fuel Wt. Range	1.9	to	3.8	lb	Mid-Point
Actual Residual Start-up Fuel Wt.		2.4	lb	In Range	2.8
Total Wt. All Fuel Added (wet basis)		27.93	lb		
High Fire Test Run End Point Range	Low		High		Mid-Point
Based on Fuel Load Wt. (w/tares)	1.7	to	2.1	lb	1.9
Actual Fuel Load Ending Wt.		1.8	lb	In Range	

Fuel Piece Moisture Reading (%-dry basis)

1	2	3	Ave.		Pc. Wt. Dry Basis			
23.6	23.5	23	23.4	In Range	2.97	lb	1.35	kg
23.4	20.3	20.2	21.3	In Range	2.84	lb	1.29	kg
24	23.4	22.2	23.2	In Range	3.13	lb	1.42	kg
20	18.5	20.2	19.6	In Range	3.85	lb	1.75	kg
23.5	20	18.4	20.6	In Range	2.77	lb	1.26	kg
			NA	NA	NA	lb	NA	kg
Total Load Ave. MC (%-dry basis)			21.5	In Range				
Total Load Ave. MC % (wet basis)			17.7					
Total Test Load Weight (dry basis) →					15.56	lb	7.06	kg
Kindling Moisture (%-dry basis)								
10	10	10	10.0	In Range	3.35	lb	1.52	kg
Start-up Fuel Moisture Readings (%-dry basis)								
23	20.5	24.5	22.7	In Range	4.35	lb	1.97	kg
Total Wt. All Fuel Added (dry basis) →					23.26	lb	10.55	kg
Total Wt. All Fuel Burned (dry basis) →					19.1	lb	8.6	kg

OMNI-Test Laboratories, Inc.

Wood Heater Run Sheets

Client: Hearth & Home Project Number: 0061WS104E Run Number: 3
Model: Dauntless-Flexburn CAT Tracking Number: 2389 Date: 10/3/19
Test Crew: B Ward
OMNI Equipment ID numbers:

Wood Heater Supplemental Data

Start Time: 0917 Booth #:

Stop Time:

Stack Gas Leak Check:

Initial: good Final:

Sample Train Leak Check:

A: @ "Hg
B: @ "Hg

Calibrations: Span Gas CO_2: 15.0 CO: 20

	Pre Test		Post Test	
	Zero	Span	Zero	Span
Time	1205	1205		
CO_2	0.00	15.01		
CO	0.00	2.00		

Air Velocity (ft/min): Initial: <50 Final: <50
Scale Audit (lbs): Initial: 10.0 Final: 10.0
Pitot Tube Leak Test: Initial: good Final: good
Stack Diameter (in): 6"
Induced Draft: 0.0
% Smoke Capture: 100%
Flue Pipe Cleaned Prior to First Test in Series:
Date: 9/30/19 Initials: BR

Tunnel Traverse		
Microtector Reading	dP (in H_2O)	T(°F)
N/A		
Center:		

	Initial	Middle	Ending
P_b (in/Hg)	29.62		29.52
RH (%)	41		40
Ambient (°F)	68		75

Tunnel Static Pressure (in H_2O):	
Beginning of Test	End of Test
N/A	

Background Filter Volume: N/A

Technician Signature: Date: 10/3/19

OMNI-Test Laboratories, Inc.

Wood Heater Run Sheets

Client: Hearth & Home Project Number: 0061WS104E Run Number: 3
Model: Dauntless-Flexburn CAT Tracking Number: 2389 Date: 10/3/19
Test Crew: B Davis
OMNI Equipment ID numbers:

Wood Heater Run Notes

Air Control Settings

Primary:

Fully open

Secondary: fixed

Tertiary/Pilot: N/A

Fan: On High

Preburn Notes

Time	Notes
0	Torch used for 50 seconds, door closed at 100 seconds, Bypass open Air fully open.
19	loaded start up fuel, Loading took less than 30 seconds. Bypass closed by 20 minutes.
36	Adjusted start up/kindling fuel.
63	loaded test load, Bypass open door open for 40 seconds then closed. Air fully open.

Test Notes

Sketch test fuel configuration:

See photo

Start up procedures & Timeline:

Bypass: open until 40 seconds then closed
Fuel loaded by: 35 Second
Door closed at: 40 seconds
Primary air: fully open entire test

Notes: Fan On high entire test

Time	Notes
	N/A

Technician Signature: Date: 10/31/19

Run 4

Low Burn

Wood Heater Test Data

7

Run: 4

Manufacturer: Hearth & Home
Model: Dauntless-CAT
Tracking No.: 2389
Project No.: 061WS104E
Test Date: 03-Oct-19
Beginning Clock Time: 13;04

Total Sampling Time: 449 min
Recording Interval: 1 min
Background Sample Volume: _____ cubic feet

Meter Box Y Factor: 0.992 (1) 0.989 (2) _____ (Amb)

Barometric Pressure:	Begin	Middle	End	Average
	29.52		29.46	29.49 0

OMNI Equipment Numbers: _____

PM Control Modules: 371, 372
Dilution Tunnel MW(dry): 29.00 lb/lb-mole
Dilution Tunnel MW(wet): 28.78 lb/lb-mole
Dilution Tunnel H2O: 2.00 percent
Dilution Tunnel Static: -0.280 "H2O
Tunnel Area: 0.19635 ft2
Pitot Tube Cp: 0.99

Avg. Tunnel Velocity: 19.48 ft/sec.
Initial Tunnel Flow: 209.0 scfm
Average Tunnel Flow: 212.8 scfm
Post-Test Leak Check (1): 0.000 cfm @ 6 in. Hg
Post-Test Leak Check (2): 0.000 cfm @ 8 in. Hg
Average Test Piece Fuel Moisture: 22.67 Dry Basis %

Technician Signature: _____

Velocity Traverse Data	Pt.1	Pt.2	Pt.3	Pt.4	Pt.5	Pt.6	Pt.7	Pt.8	Center	
Initial dP	0.074	0.084	0.078	0.072	0.074	0.082	0.082	0.080	0.086	"H2O
Temp:	85	85	85	85	85	85	85	85	85	°F

V_{strav} 19.06 ft/sec V_{scent} 19.89 ft/sec F_p 0.959

	Particulate Sampling Data														Fuel Weight (lb)		Temperature Data (°F)													Stack Gas Data		
Elapsed Time (min)	Gas Meter 1 (ft^3)	Gas Meter 2 (ft^3)	Sample Rate 1 (cfm)	Sample Rate 2 (cfm)	Orifice dH 1 ("H_2O)	Meter 1 Temp (°F)	Meter 1 Vacuum ("Hg)	Orifice dH 2 ("H_2O)	Meter 2 Temp (°F)	Meter 2 Vacuum ("Hg)	Dilution Tunnel (°F)	Dilution Tunnel Center dP	Pro. Rate 1	Pro. Rate 2	Scale Reading	Weight Change	Firebox Top	Firebox Bottom	Firebox Back	Firebox Left	Firebox Right	Avg. Stove Surface	Catalyst Exit	Stack	Filter 1	Dryer Exit 1	Filter 2	Dryer Exit 2	Ambient	Draft ("H_2O)	CO_2 (%)	CO (%)
0	0.000	0.000			-0.01	78	1.63	0.01	77	1.6	92	0.090			21.1		402	346	331	195	310	317	949	264	83	62	86	60	75	-0.030	6.89	0.33
1	0.125	0.160	0.13	0.16	2.19	79	0.56	1.80	77	-3.2	105	0.090	77	93	21.1	0.00	392	344	329	193	310	314	974	250	83	51	86	53	75	-0.035	6.8	0.33
2	0.288	0.332	0.16	0.17	2.23	79	0.47	1.77	77	-3.2	94	0.080	105	105	21.1	-0.04	376	341	327	191	310	309	1077	258	83	49	86	52	74	-0.037	4.17	0.23
3	0.452	0.505	0.16	0.17	2.20	79	0.51	1.76	77	-3.2	93	0.090	100	99	20.9	-0.11	364	339	324	190	311	306	1173	266	83	49	86	52	74	-0.038	6.85	0.13
4	0.613	0.677	0.16	0.17	2.17	79	0.44	1.75	77	-3.3	93	0.090	98	99	20.9	-0.04	354	335	321	190	311	302	1212	272	83	49	85	52	74	-0.039	9.07	0.12
5	0.774	0.847	0.16	0.17	2.17	79	0.07	1.76	77	-3.1	93	0.080	104	103	20.9	-0.04	343	332	317	190	311	299	1237	276	84	49	85	52	74	-0.040	10.08	0.11
6	0.936	1.019	0.16	0.17	2.14	79	0.59	1.74	77	-3	93	0.090	99	99	20.7	-0.11	334	329	314	190	311	296	1253	280	84	49	85	52	74	-0.040	10.21	0.11
7	1.096	1.190	0.16	0.17	2.14	79	0.4	1.72	77	-3.1	92	0.080	103	104	20.7	-0.09	325	325	311	190	311	292	1237	282	84	49	85	52	75	-0.040	9.99	0.12
8	1.256	1.359	0.16	0.17	2.14	79	0.6	1.72	77	-3.1	92	0.080	103	103	20.6	-0.07	317	321	308	191	311	290	1210	284	84	49	84	52	74	-0.040	9.75	0.13
9	1.415	1.529	0.16	0.17	2.13	79	0.61	1.70	77	-3.2	92	0.090	97	97	20.5	-0.09	311	317	304	191	311	287	1187	284	84	49	84	52	74	-0.040	9.64	0.14
10	1.575	1.699	0.16	0.17	2.12	79	0.21	1.70	77	-3.3	92	0.090	97	97	20.4	-0.07	303	314	302	192	310	284	1181	285	84	49	84	52	74	-0.040	9.51	0.15
11	1.733	1.868	0.16	0.17	2.10	79	0.54	1.70	77	-3.1	92	0.080	102	103	20.4	-0.04	298	310	299	192	309	282	1183	286	84	49	84	52	74	-0.040	9.29	0.18
12	1.893	2.038	0.16	0.17	2.10	79	0.43	1.70	77	-3.2	92	0.090	97	97	20.3	-0.09	292	307	295	193	308	279	1180	286	83	49	84	52	74	-0.040	9.22	0.18
13	2.050	2.207	0.16	0.17	2.10	79	0.61	1.69	77	-3.2	92	0.090	95	97	20.2	-0.07	287	303	293	194	308	277	1174	287	83	49	84	52	75	-0.040	9.28	0.18
14	2.209	2.376	0.16	0.17	2.07	79	0.22	1.70	77	-3	92	0.090	97	97	20.1	-0.09	283	299	290	194	307	275	1181	287	83	49	85	52	74	-0.040	9.21	0.2
15	2.370	2.547	0.16	0.17	2.35	79	-0.02	1.82	77	-3.5	92	0.080	104	104	20.1	-0.04	278	296	287	194	306	272	1180	288	83	49	85	52	74	-0.040	9.18	0.21
16	2.537	2.722	0.17	0.18	2.32	79	0.16	1.81	77	-3.3	92	0.080	108	106	20.0	-0.11	274	292	284	194	305	270	1176	289	83	49	85	52	75	-0.040	9.19	0.22
17	2.704	2.898	0.17	0.18	2.30	79	-0.01	1.81	77	-3.5	92	0.090	101	101	19.9	-0.09	270	289	282	194	304	268	1190	289	83	49	86	52	74	-0.040	9.24	0.21
18	2.870	3.072	0.17	0.17	2.31	79	0.17	1.82	77	-3.3	92	0.090	101	100	19.8	-0.07	266	286	280	194	303	266	1193	289	83	49	86	52	74	-0.040	9.28	0.2
19	3.036	3.247	0.17	0.18	2.28	79	0.54	1.81	77	-3.4	92	0.090	101	100	19.8	-0.09	263	283	277	194	302	264	1200	290	83	49	86	52	74	-0.040	9.32	0.19
20	3.202	3.422	0.17	0.18	2.31	79	0.45	1.80	77	-3.4	92	0.080	107	106	19.7	-0.07	260	281	275	194	301	262	1207	290	83	49	86	52	74	-0.040	9.47	0.2
21	3.368	3.596	0.17	0.17	2.30	79	0.45	1.81	77	-3.2	91	0.090	101	100	19.6	-0.09	256	278	273	194	299	260	1214	290	83	49	86	52	74	-0.040	9.62	0.21
22	3.535	3.771	0.17	0.18	2.29	79	0.01	1.80	77	-3.4	92	0.090	101	100	19.5	-0.11	255	275	271	195	298	259	1227	292	84	49	86	52	74	-0.040	9.75	0.22
23	3.700	3.945	0.17	0.17	2.27	79	0.52	1.80	77	-3.5	92	0.090	100	100	19.4	-0.04	252	273	269	195	297	257	1241	294	84	50	86	52	74	-0.040	9.8	0.26
24	3.865	4.119	0.17	0.17	2.28	79	0.39	1.79	77	-3.2	92	0.090	100	100	19.4	-0.09	250	270	267	195	296	256	1261	295	84	50	86	52	74	-0.041	10.03	0.25
25	4.031	4.293	0.17	0.17	2.29	79	0.48	1.80	77	-3.2	92	0.090	101	100	19.2	-0.11	248	268	265	195	295	254	1268	297	84	50	85	53	74	-0.041	10.29	0.24
26	4.197	4.467	0.17	0.17	2.29	79	0.37	1.80	77	-3.3	92	0.080	107	106	19.2	-0.04	245	265	263	196	293	252	1277	299	84	50	85	53	74	-0.041	10.65	0.2
27	4.363	4.642	0.17	0.18	2.28	79	0.43	1.79	77	-3.5	92	0.090	101	100	19.1	-0.11	243	263	261	196	292	251	1290	301	84	50	85	53	74	-0.041	10.81	0.19
28	4.528	4.816	0.16	0.17	2.27	79	0.46	1.80	77	-3.4	92	0.090	100	100	19.0	-0.09	241	261	260	197	290	250	1298	302	84	50	85	53	74	-0.042	10.98	0.19
29	4.693	4.990	0.17	0.17	2.28	79	0.06	1.80	77	-3.4	92	0.090	100	100	18.9	-0.11	240	259	258	198	289	249	1306	303	83	50	84	53	74	-0.042	11.26	0.18
30	4.858	5.164	0.17	0.17	2.29	79	0.14	1.79	77	-3.5	92	0.090	100	100	18.8	-0.09	238	257	256	198	288	247	1326	305	83	50	84	53	74	-0.042	11.44	0.18
31	5.024	5.338	0.17	0.17	2.28	79	0.55	1.79	77	-3.4	92	0.090	101	100	18.7	-0.07	237	255	255	199	287	247	1344	307	83	50	84	53	73	-0.042	11.59	0.2
32	5.190	5.512	0.17	0.17	2.26	79	0.12	1.79	77	-3.3	92	0.090	101	100	18.6	-0.09	235	253	254	201	285	246	1361	308	83	51	84	53	73	-0.043	11.84	0.17
33	5.355	5.686	0.17	0.17	2.27	79	0.24	1.79	77	-3.2	92	0.090	100	100	18.5	-0.11	234	252	252	203	284	245	1373	311	83	51	84	53	73	-0.043	12.12	0.13
34	5.520	5.860	0.16	0.17	2.28	79	0.03	1.79	77	-3.5	93	0.090	100	100	18.5	-0.09	234	250	251	204	283	244	1400	313	83	51	85	53	73	-0.043	12.43	0.1
35	5.686	6.034	0.17	0.17	2.28	79	0.14	1.80	77	-3.3	93	0.090	101	100	18.3	-0.11	234	248	250	205	282	244	1426	315	83	51	85	53	74	-0.043	12.74	0.09

Wood Heater Test Data

7

Run: 4

Manufacturer: Hearth & Home
Model: Dauntless-CAT
Tracking No.: 2389
Project No.: 061WS104E
Test Date: 03-Oct-19
Beginning Clock Time: 13;04

Total Sampling Time: 449 min
Recording Interval: 1 min
Background Sample Volume: _____ cubic feet

Meter Box Y Factor: 0.992 (1) 0.989 (2) _____ (Amb)

Barometric Pressure:	Begin	Middle	End	Average
	29.52		29.46	29.49 0

OMNI Equipment Numbers: _____

PM Control Modules: 371, 372
Dilution Tunnel MW(dry): 29.00 lb/lb-mole
Dilution Tunnel MW(wet): 28.78 lb/lb-mole
Dilution Tunnel H2O: 2.00 percent
Dilution Tunnel Static: -0.280 "H2O
Tunnel Area: 0.19635 ft2
Pitot Tube Cp: 0.99

Avg. Tunnel Velocity: 19.48 ft/sec.
Initial Tunnel Flow: 209.0 scfm
Average Tunnel Flow: 212.8 scfm
Post-Test Leak Check (1): 0.000 cfm @ 6 in. Hg
Post-Test Leak Check (2): 0.000 cfm @ 8 in. Hg
Average Test Piece Fuel Moisture: 22.67 Dry Basis %

Technician Signature: _____

Velocity Traverse Data	Pt.1	Pt.2	Pt.3	Pt.4	Pt.5	Pt.6	Pt.7	Pt.8	Center	
Initial dP	0.074	0.084	0.078	0.072	0.074	0.082	0.082	0.080	0.086	"H2O
Temp:	85	85	85	85	85	85	85	85	85	°F

V_{strav} 19.06 ft/sec V_{scent} 19.89 ft/sec F_p 0.959

Elapsed Time (min)	Particulate Sampling Data: Gas Meter 1 (ft^3)	Gas Meter 2 (ft^3)	Sample Rate 1 (cfm)	Sample Rate 2 (cfm)	Orifice dH 1 ("H_2O)	Meter 1 Temp (°F)	Meter 1 Vacuum ("Hg)	Orifice dH 2 ("H_2O)	Meter 2 Temp (°F)	Meter 2 Vacuum ("Hg)	Dilution Tunnel (°F)	Dilution Tunnel Center dP	Pro. Rate 1	Pro. Rate 2	Fuel Weight (lb): Scale Reading	Weight Change	Temperature Data (°F): Firebox Top	Firebox Bottom	Firebox Back	Firebox Left	Firebox Right	Avg. Stove Surface	Catalyst Exit	Stack	Filter 1	Dryer Exit 1	Filter 2	Dryer Exit 2	Ambient	Stack Gas Data: Draft ("H_2O)	CO_2 (%)	CO (%)
36	5.851	6.207	0.17	0.17	2.25	79	0	1.79	77	-3.2	92	0.090	100	99	18.3	-0.09	232	247	248	207	280	243	1455	318	83	51	85	53	74	-0.044	13.07	0.09
37	6.016	6.381	0.17	0.17	2.27	79	0.06	1.79	77	-3.5	93	0.090	100	100	18.1	-0.11	232	245	248	208	279	242	1470	320	83	51	85	53	74	-0.044	13.36	0.09
38	6.181	6.555	0.17	0.17	2.28	79	0.33	1.79	77	-3.5	93	0.090	100	100	18.1	-0.09	231	243	246	209	277	241	1494	322	84	51	86	53	74	-0.044	13.57	0.1
39	6.347	6.728	0.17	0.17	2.27	79	0.09	1.79	77	-3.4	93	0.090	101	99	17.9	-0.15	231	242	246	210	276	241	1510	324	84	51	86	53	75	-0.045	13.7	0.11
40	6.512	6.903	0.16	0.18	2.25	79	0.52	1.79	77	-3.2	93	0.090	100	100	17.8	-0.11	230	242	244	212	275	241	1526	325	84	51	86	54	75	-0.045	13.74	0.13
41	6.677	7.076	0.17	0.17	2.27	79	0.38	1.78	77	-3.3	93	0.090	100	99	17.7	-0.04	230	240	244	215	274	241	1538	326	84	52	86	54	75	-0.045	13.91	0.16
42	6.842	7.250	0.17	0.17	2.28	79	0.51	1.78	77	-3.2	93	0.090	100	100	17.6	-0.15	230	239	243	216	272	240	1555	329	84	52	86	54	74	-0.045	14	0.18
43	7.008	7.424	0.17	0.17	2.25	79	0.01	1.79	77	-3.2	93	0.090	101	100	17.5	-0.09	230	238	242	219	271	240	1569	329	84	52	86	54	75	-0.046	14.13	0.2
44	7.173	7.598	0.17	0.17	2.26	79	0	1.78	77	-3.5	93	0.090	100	100	17.4	-0.11	230	237	241	220	270	240	1588	333	84	52	86	54	74	-0.046	14.26	0.26
45	7.338	7.771	0.17	0.17	2.27	79	0.09	1.78	77	-3.4	94	0.090	100	99	17.3	-0.09	231	236	241	222	269	240	1600	335	84	52	86	54	74	-0.047	14.45	0.34
46	7.503	7.945	0.17	0.17	2.28	79	0.13	1.79	77	-3.5	94	0.090	100	100	17.2	-0.15	231	235	240	224	269	240	1612	338	83	52	85	54	74	-0.047	14.59	0.48
47	7.669	8.118	0.17	0.17	2.25	79	0.01	1.78	77	-3.3	94	0.090	101	99	17.0	-0.11	232	234	240	227	268	240	1614	340	83	52	85	54	74	-0.047	14.61	0.59
48	7.834	8.292	0.17	0.17	2.26	79	0.52	1.78	77	-3.4	94	0.090	100	100	17.0	-0.09	232	233	239	229	266	240	1624	343	83	52	85	54	74	-0.048	14.74	0.72
49	7.998	8.466	0.16	0.17	2.26	79	0.16	1.78	77	-3.4	94	0.090	100	100	16.8	-0.11	232	233	238	231	266	240	1627	344	83	52	85	54	74	-0.048	14.75	0.82
50	8.163	8.640	0.17	0.17	2.28	79	0.2	1.80	78	-3.5	94	0.090	100	100	16.7	-0.15	232	232	238	233	265	240	1628	346	83	52	85	54	74	-0.048	14.82	1
51	8.329	8.813	0.17	0.17	2.24	79	0.24	1.79	78	-3.4	95	0.090	101	99	16.6	-0.09	232	231	238	235	264	240	1622	348	83	52	84	54	74	-0.049	14.82	1.2
52	8.493	8.987	0.16	0.17	2.25	79	0.52	1.78	78	-3.4	94	0.080	106	106	16.4	-0.15	233	231	237	237	264	240	1618	347	83	53	84	54	74	-0.049	14.75	1.44
53	8.658	9.161	0.16	0.17	2.26	79	0.44	1.78	78	-3.3	94	0.080	107	106	16.4	-0.09	234	230	237	238	263	240	1611	350	83	53	84	54	74	-0.049	14.7	1.72
54	8.823	9.334	0.17	0.17	2.27	79	0.04	1.79	78	-3.4	95	0.090	101	99	16.2	-0.15	234	230	237	240	262	241	1609	352	84	53	85	55	74	-0.050	14.67	1.98
55	8.989	9.508	0.17	0.17	2.26	79	0.54	1.79	78	-3.2	95	0.090	101	100	16.1	-0.11	235	229	236	241	261	240	1605	352	84	53	85	55	74	-0.050	14.64	2.25
56	9.153	9.682	0.16	0.17	2.25	80	0.02	1.78	78	-3.3	95	0.090	100	100	15.9	-0.15	235	229	236	242	261	241	1607	353	84	53	85	55	73	-0.050	14.55	2.43
57	9.318	9.856	0.16	0.17	2.26	80	0.06	1.77	78	-3.3	95	0.080	106	106	15.8	-0.09	237	229	236	244	259	241	1600	355	84	53	85	55	73	-0.050	14.48	2.65
58	9.483	10.029	0.17	0.17	2.26	80	0.54	1.78	78	-3.4	96	0.090	100	99	15.7	-0.15	238	228	236	244	259	241	1601	356	84	53	86	55	74	-0.050	14.47	2.78
59	9.648	10.203	0.16	0.17	2.25	80	0.14	1.77	78	-3.2	96	0.090	100	100	15.5	-0.15	239	228	236	246	259	242	1594	357	84	53	86	55	74	-0.050	14.53	2.9
60	9.812	10.376	0.16	0.17	2.25	80	0.11	1.78	78	-3.4	96	0.080	106	105	15.4	-0.15	240	228	236	247	259	242	1591	359	84	53	86	55	74	-0.051	14.41	3
61	9.978	10.550	0.17	0.17	2.52	80	0.68	1.77	78	-3.3	96	0.090	101	100	15.3	-0.09	242	227	235	248	258	242	1587	361	84	53	86	55	74	-0.051	14.46	3.33
62	10.145	10.723	0.17	0.17	2.25	80	0.15	1.78	78	-3.2	96	0.090	102	99	15.1	-0.15	242	227	235	249	257	242	1593	360	84	53	86	55	74	-0.051	14.41	3.73
63	10.310	10.896	0.17	0.17	2.25	80	0.4	1.77	78	-3.4	96	0.090	100	99	15.1	-0.09	243	227	235	250	257	242	1603	360	84	53	86	55	74	-0.050	14.37	3.63
64	10.474	11.070	0.16	0.17	2.23	80	0.54	1.76	78	-3.2	96	0.090	100	100	14.9	-0.15	245	226	236	250	257	243	1615	358	84	54	86	55	74	-0.050	14.33	3.22
65	10.639	11.244	0.16	0.17	2.24	80	0.29	1.77	78	-3.3	96	0.090	100	100	14.8	-0.11	246	226	236	250	257	243	1622	357	83	54	86	55	74	-0.050	14.4	2.65
66	10.803	11.416	0.16	0.17	2.25	80	0.28	1.79	78	-3.4	96	0.090	100	99	14.6	-0.15	248	225	236	250	256	243	1625	357	83	54	86	55	74	-0.050	14.42	2.12
67	10.968	11.590	0.16	0.17	2.24	80	0.41	1.78	78	-3.5	96	0.080	107	106	14.5	-0.09	248	225	236	250	256	243	1627	356	83	54	86	55	74	-0.050	14.4	1.9
68	11.132	11.763	0.16	0.17	2.24	80	0.47	1.77	78	-3.3	96	0.090	100	99	14.4	-0.11	249	225	236	252	256	244	1624	357	83	54	86	55	74	-0.050	14.37	1.78
69	11.296	11.937	0.16	0.17	2.25	80	0.12	1.77	78	-3.4	96	0.090	100	100	14.4	-0.09	250	226	237	252	255	244	1630	356	83	54	85	55	74	-0.050	14.44	1.68
70	11.461	12.110	0.17	0.17	2.24	80	0.12	1.78	78	-3.3	96	0.090	100	99	14.2	-0.15	252	226	237	254	255	245	1633	357	83	54	85	56	73	-0.050	14.41	1.7
71	11.625	12.284	0.16	0.17	2.23	80	0.06	1.78	78	-3.5	96	0.090	100	100	14.1	-0.09	254	226	237	255	254	245	1636	358	83	54	85	56	74	-0.050	14.43	1.64

Wood Heater Test Data

7

Run: 4

Manufacturer: Hearth & Home
Model: Dauntless-CAT
Tracking No.: 2389
Project No.: 061WS104E
Test Date: 03-Oct-19
Beginning Clock Time: 13;04

Total Sampling Time: 449 min
Recording Interval: 1 min
Background Sample Volume: _____ cubic feet

Meter Box Y Factor: 0.992 (1) 0.989 (2) _____ (Amb)

Barometric Pressure:	Begin	Middle	End	Average
	29.52		29.46	29.49 0

OMNI Equipment Numbers: _____

PM Control Modules: 371, 372
Dilution Tunnel MW(dry): 29.00 lb/lb-mole
Dilution Tunnel MW(wet): 28.78 lb/lb-mole
Dilution Tunnel H2O: 2.00 percent
Dilution Tunnel Static: -0.280 "H2O
Tunnel Area: 0.19635 ft2
Pitot Tube Cp: 0.99

Avg. Tunnel Velocity: 19.48 ft/sec.
Initial Tunnel Flow: 209.0 scfm
Average Tunnel Flow: 212.8 scfm
Post-Test Leak Check (1): 0.000 cfm @ 6 in. Hg
Post-Test Leak Check (2): 0.000 cfm @ 8 in. Hg
Average Test Piece Fuel Moisture: 22.67 Dry Basis %

Technician Signature: _____

Velocity Traverse Data

	Pt.1	Pt.2	Pt.3	Pt.4	Pt.5	Pt.6	Pt.7	Pt.8	Center	
Initial dP	0.074	0.084	0.078	0.072	0.074	0.082	0.082	0.080	0.086	"H2O
Temp:	85	85	85	85	85	85	85	85	85	°F

V_{strav} 19.06 ft/sec V_{scent} 19.89 ft/sec F_p 0.959

Elapsed Time (min)	Particulate Sampling Data: Gas Meter 1 (ft^3)	Gas Meter 2 (ft^3)	Sample Rate 1 (cfm)	Sample Rate 2 (cfm)	Orifice dH 1 ("H_2O)	Meter 1 Temp (°F)	Meter 1 Vacuum ("Hg)	Orifice dH 2 ("H_2O)	Meter 2 Temp (°F)	Meter 2 Vacuum ("Hg)	Dilution Tunnel (°F)	Dilution Tunnel Center dP	Pro. Rate 1	Pro. Rate 2	Fuel Weight (lb): Scale Reading	Weight Change	Temperature Data (°F): Firebox Top	Firebox Bottom	Firebox Back	Firebox Left	Firebox Right	Avg. Stove Surface	Catalyst Exit	Stack	Filter 1	Dryer Exit 1	Filter 2	Dryer Exit 2	Ambient	Stack Gas Data: Draft ("H_2O)	CO_2 (%)	CO (%)
72	11.789	12.457	0.16	0.17	2.25	80	-0.02	1.77	78	-3.3	96	0.090	100	99	14.0	-0.11	255	226	237	256	254	246	1646	357	83	54	85	56	74	-0.050	14.43	1.52
73	11.953	12.631	0.16	0.17	2.25	80	0.51	1.79	78	-3.5	96	0.090	100	100	13.9	-0.11	256	226	238	257	254	246	1654	357	84	54	85	56	74	-0.050	14.51	1.45
74	12.118	12.805	0.17	0.17	2.23	80	0.22	1.78	78	-3.2	96	0.090	100	100	13.8	-0.13	257	225	238	257	254	246	1652	358	84	54	85	56	74	-0.050	14.43	1.44
75	12.282	12.978	0.16	0.17	2.23	80	0.36	1.78	78	-3.2	96	0.080	106	105	13.6	-0.11	258	226	238	258	255	247	1651	358	84	54	85	56	74	-0.050	14.47	1.41
76	12.446	13.151	0.16	0.17	2.24	80	0.53	1.78	78	-3.5	96	0.090	100	99	13.6	-0.09	259	226	239	259	254	247	1655	357	84	54	85	56	74	-0.050	14.49	1.36
77	12.611	13.325	0.17	0.17	2.24	80	0.28	1.79	78	-3.4	96	0.090	100	100	13.4	-0.11	260	226	239	260	255	248	1650	356	84	54	85	56	75	-0.050	14.55	1.28
78	12.774	13.498	0.16	0.17	2.22	80	0.03	1.78	78	-3.4	97	0.080	105	105	13.3	-0.15	262	226	239	261	255	249	1655	356	84	54	85	56	75	-0.050	14.48	1.25
79	12.938	13.672	0.16	0.17	2.23	80	0.5	1.77	78	-3.2	96	0.090	100	100	13.2	-0.09	263	226	240	262	255	249	1656	355	84	54	85	56	75	-0.050	14.48	1.25
80	13.103	13.845	0.16	0.17	2.22	80	0.17	1.77	78	-3.5	96	0.080	107	105	13.1	-0.07	264	227	240	262	254	249	1656	356	84	54	86	56	74	-0.050	14.48	1.25
81	13.267	14.019	0.16	0.17	2.21	80	0.53	1.78	78	-3.2	96	0.090	100	100	13.0	-0.13	265	227	241	262	254	250	1656	356	84	54	86	56	74	-0.050	14.52	1.18
82	13.430	14.192	0.16	0.17	2.23	80	0.03	1.78	78	-3.3	96	0.090	99	99	12.9	-0.11	267	227	241	262	255	250	1658	356	84	54	86	56	74	-0.049	14.62	1.03
83	13.594	14.365	0.16	0.17	2.25	80	0.4	1.78	78	-3.2	96	0.080	106	105	12.8	-0.09	269	227	241	262	254	251	1658	356	84	54	86	56	74	-0.050	14.64	0.91
84	13.759	14.539	0.17	0.17	2.23	80	0.13	1.77	78	-3.5	97	0.090	101	100	12.7	-0.15	271	227	242	264	253	251	1657	356	84	54	86	56	74	-0.050	14.64	0.83
85	13.922	14.712	0.16	0.17	2.23	80	0	1.78	78	-3.2	97	0.090	99	99	12.5	-0.11	273	227	243	264	253	252	1659	356	83	55	87	56	74	-0.050	14.66	0.76
86	14.086	14.886	0.16	0.17	2.24	80	0.34	1.77	78	-3.5	97	0.090	100	100	12.5	-0.09	275	227	243	264	254	253	1660	356	83	55	86	56	74	-0.049	14.67	0.78
87	14.251	15.060	0.16	0.17	2.23	80	0.51	1.78	78	-3.2	96	0.090	100	100	12.3	-0.11	276	227	243	265	254	253	1660	356	83	55	86	57	74	-0.049	14.61	0.76
88	14.414	15.233	0.16	0.17	2.21	80	0.34	1.78	78	-3.5	96	0.090	99	99	12.3	-0.09	277	228	243	265	255	254	1662	356	83	55	86	57	75	-0.050	14.75	0.72
89	14.578	15.406	0.16	0.17	2.24	80	-0.02	1.79	78	-3.5	97	0.090	100	99	12.2	-0.07	279	228	244	266	254	254	1673	357	83	55	86	57	74	-0.050	14.81	0.75
90	14.742	15.580	0.16	0.17	2.22	80	0.38	1.78	78	-3.5	96	0.090	100	100	12.1	-0.13	280	228	244	267	254	255	1669	357	83	55	86	57	74	-0.050	14.79	0.9
91	14.906	15.753	0.16	0.17	2.21	80	0.06	1.77	78	-3.3	96	0.090	100	99	11.9	-0.11	282	229	245	268	255	256	1666	358	84	55	86	57	75	-0.050	14.85	0.93
92	15.070	15.927	0.16	0.17	2.22	80	-0.02	1.77	78	-3.3	97	0.090	100	100	11.8	-0.11	284	229	246	269	256	257	1668	358	84	55	85	57	75	-0.050	14.86	0.87
93	15.233	16.100	0.16	0.17	2.24	80	0.24	1.79	78	-3.3	97	0.090	99	99	11.7	-0.13	286	229	246	271	256	258	1665	358	84	55	85	57	75	-0.049	14.9	0.88
94	15.397	16.274	0.16	0.17	2.22	80	0.24	1.78	78	-3.2	96	0.080	106	106	11.6	-0.07	287	230	247	271	257	258	1657	356	84	55	85	57	75	-0.049	14.9	0.85
95	15.561	16.448	0.16	0.17	2.23	80	0.49	1.77	78	-3.2	96	0.090	100	100	11.6	-0.09	289	230	247	272	256	259	1642	353	84	55	85	57	75	-0.049	14.78	0.64
96	15.725	16.621	0.16	0.17	2.23	80	0.3	1.77	78	-3.2	97	0.090	100	99	11.4	-0.11	292	230	248	271	256	259	1636	352	84	55	85	57	74	-0.048	14.52	0.44
97	15.889	16.794	0.16	0.17	2.23	80	0.27	1.78	78	-3.4	97	0.090	100	99	11.4	-0.09	293	231	249	270	255	260	1629	351	84	55	85	57	74	-0.048	14.33	0.32
98	16.052	16.968	0.16	0.17	2.22	80	0.31	1.78	78	-3.5	97	0.080	105	106	11.2	-0.11	296	231	249	270	255	260	1627	351	84	55	85	57	74	-0.048	14.2	0.25
99	16.216	17.141	0.16	0.17	2.23	80	-0.01	1.77	78	-3.5	97	0.090	100	99	11.2	-0.09	298	231	250	270	255	261	1614	350	84	55	85	57	74	-0.049	14.26	0.22
100	16.380	17.315	0.16	0.17	2.23	80	0.24	1.77	78	-3.3	96	0.090	100	100	11.0	-0.11	300	231	250	270	255	261	1610	351	84	55	85	57	75	-0.049	14.26	0.24
101	16.543	17.488	0.16	0.17	2.21	80	0.03	1.78	78	-3.3	97	0.090	99	99	11.0	-0.09	302	232	250	270	256	262	1609	350	84	55	85	57	75	-0.048	14.26	0.24
102	16.707	17.662	0.16	0.17	2.23	80	0.25	1.77	78	-3.4	96	0.090	100	100	10.9	-0.07	303	232	251	269	256	262	1607	350	84	55	86	57	74	-0.048	14.24	0.23
103	16.871	17.836	0.16	0.17	2.24	80	0.16	1.77	78	-3.4	96	0.090	100	100	10.8	-0.09	305	233	252	269	256	263	1607	350	83	55	86	57	74	-0.048	14.14	0.23
104	17.034	18.009	0.16	0.17	2.21	80	0.08	1.78	78	-3.4	96	0.090	99	99	10.7	-0.11	307	233	252	269	257	264	1611	349	83	55	86	57	74	-0.049	14.13	0.23
105	17.198	18.183	0.16	0.17	2.23	80	-0.01	1.78	78	-3.2	96	0.080	106	106	10.6	-0.09	309	234	253	269	257	264	1630	350	83	55	86	57	75	-0.048	14.27	0.24
106	17.361	18.356	0.16	0.17	2.23	80	-0.03	1.77	78	-3.4	96	0.090	99	99	10.4	-0.15	311	234	253	269	257	265	1648	350	83	55	86	58	75	-0.049	14.36	0.28
107	17.525	18.529	0.16	0.17	2.20	80	0.14	1.77	78	-3.4	96	0.090	100	99	10.4	-0.04	313	235	254	269	257	266	1663	352	83	55	86	58	75	-0.049	14.49	0.38

Wood Heater Test Data

7

Run: 4

Manufacturer: Hearth & Home
Model: Dauntless-CAT
Tracking No.: 2389
Project No.: 061WS104E
Test Date: 03-Oct-19
Beginning Clock Time: 13;04

Total Sampling Time: 449 min
Recording Interval: 1 min
Background Sample Volume: _____ cubic feet

Meter Box Y Factor: 0.992 (1) 0.989 (2) _____ (Amb)

Barometric Pressure:	Begin	Middle	End	Average
	29.52		29.46	29.49 0

OMNI Equipment Numbers: _____

PM Control Modules: 371, 372
Dilution Tunnel MW(dry): 29.00 lb/lb-mole
Dilution Tunnel MW(wet): 28.78 lb/lb-mole
Dilution Tunnel H2O: 2.00 percent
Dilution Tunnel Static: -0.280 "H2O
Tunnel Area: 0.19635 ft2
Pitot Tube Cp: 0.99

Avg. Tunnel Velocity: 19.48 ft/sec.
Initial Tunnel Flow: 209.0 scfm
Average Tunnel Flow: 212.8 scfm
Post-Test Leak Check (1): 0.000 cfm @ 6 in. Hg
Post-Test Leak Check (2): 0.000 cfm @ 8 in. Hg
Average Test Piece Fuel Moisture: 22.67 Dry Basis %

Technician Signature: _____

Velocity Traverse Data

	Pt.1	Pt.2	Pt.3	Pt.4	Pt.5	Pt.6	Pt.7	Pt.8	Center	
Initial dP	0.074	0.084	0.078	0.072	0.074	0.082	0.082	0.080	0.086	"H2O
Temp:	85	85	85	85	85	85	85	85	85	°F

V_{strav} 19.06 ft/sec V_{scent} 19.89 ft/sec F_p 0.959

Elapsed Time (min)	Particulate Sampling Data: Gas Meter 1 (ft^3)	Gas Meter 2 (ft^3)	Sample Rate 1 (cfm)	Sample Rate 2 (cfm)	Orifice dH 1 ("H_2O)	Meter 1 Temp (°F)	Meter 1 Vacuum ("Hg)	Orifice dH 2 ("H_2O)	Meter 2 Temp (°F)	Meter 2 Vacuum ("Hg)	Dilution Tunnel (°F)	Dilution Tunnel Center dP	Pro. Rate 1	Pro. Rate 2	Fuel Weight (lb): Scale Reading	Weight Change	Temperature Data (°F): Firebox Top	Firebox Bottom	Firebox Back	Firebox Left	Firebox Right	Avg. Stove Surface	Catalyst Exit	Stack	Filter 1	Dryer Exit 1	Filter 2	Dryer Exit 2	Ambient	Stack Gas Data: Draft ("H_2O)	CO_2 (%)	CO (%)
108	17.689	18.703	0.16	0.17	2.22	80	0.49	1.78	78	-3.2	96	0.080	106	106	10.3	-0.11	314	235	255	270	257	266	1663	353	83	55	86	58	75	-0.049	14.68	0.66
109	17.852	18.876	0.16	0.17	2.23	80	0.14	1.78	78	-3.4	97	0.080	105	105	10.2	-0.09	316	236	255	270	257	267	1663	354	83	55	86	58	74	-0.049	14.68	1.05
110	18.016	19.050	0.16	0.17	2.22	80	0.49	1.77	78	-3.3	97	0.090	100	100	10.1	-0.11	319	236	256	270	257	268	1659	356	84	55	86	58	74	-0.048	14.65	1.26
111	18.179	19.223	0.16	0.17	2.21	80	0.02	1.77	78	-3.4	97	0.090	99	99	10.0	-0.09	321	237	257	270	257	268	1655	354	84	55	86	58	74	-0.048	14.67	1.26
112	18.342	19.397	0.16	0.17	2.22	80	0.11	1.77	78	-3.2	96	0.090	99	100	9.9	-0.11	321	237	258	271	257	269	1660	352	84	56	86	58	75	-0.048	14.64	1.26
113	18.506	19.570	0.16	0.17	2.23	80	0.37	1.80	78	-3.3	96	0.090	100	99	9.8	-0.11	322	236	258	270	257	269	1659	352	84	56	86	58	75	-0.048	14.67	1.15
114	18.670	19.745	0.16	0.18	2.23	80	0.49	1.80	78	-3.5	97	0.080	106	107	9.7	-0.09	322	237	259	270	259	269	1657	351	84	56	86	58	75	-0.048	14.59	1.06
115	18.834	19.920	0.16	0.18	2.24	80	0.43	1.80	78	-3.5	97	0.090	100	101	9.6	-0.11	323	237	260	270	258	270	1657	350	84	56	85	58	74	-0.048	14.51	0.98
116	18.998	20.094	0.16	0.17	2.22	80	0.05	1.80	78	-3.5	97	0.090	100	100	9.5	-0.09	324	238	261	270	259	270	1658	349	84	56	85	58	74	-0.048	14.55	0.92
117	19.162	20.269	0.16	0.17	2.21	80	0.28	1.80	78	-3.3	96	0.090	100	101	9.4	-0.11	324	239	261	270	259	271	1658	350	84	56	85	58	75	-0.048	14.61	0.91
118	19.325	20.444	0.16	0.18	2.24	80	0.08	1.79	78	-3.5	96	0.090	99	101	9.3	-0.09	325	239	262	271	260	271	1658	350	84	56	85	58	76	-0.048	14.6	0.92
119	19.490	20.618	0.16	0.17	2.24	80	0.16	1.81	78	-3.5	96	0.080	107	106	9.2	-0.11	327	240	263	272	260	272	1665	351	84	56	85	58	75	-0.048	14.64	0.95
120	19.654	20.793	0.16	0.18	2.23	80	0.51	1.80	78	-3.5	97	0.090	100	101	9.1	-0.09	327	240	264	273	261	273	1663	351	84	56	85	58	76	-0.048	14.76	0.99
121	19.817	20.967	0.16	0.17	2.24	80	-0.04	1.79	78	-3.4	97	0.090	99	100	9.0	-0.11	328	241	264	274	261	274	1656	351	84	56	85	58	76	-0.049	14.83	1.11
122	19.981	21.142	0.16	0.18	2.23	80	0.06	1.81	78	-3.5	97	0.090	100	101	8.9	-0.09	329	242	265	274	261	274	1646	353	83	56	85	59	75	-0.049	14.88	1.23
123	20.145	21.317	0.16	0.18	2.23	80	0.27	1.80	78	-3.4	97	0.090	100	101	8.8	-0.11	331	242	266	275	260	275	1645	355	83	56	85	59	74	-0.049	14.93	1.41
124	20.309	21.491	0.16	0.17	2.22	80	0.41	1.79	78	-3.3	98	0.090	100	100	8.7	-0.09	332	243	267	275	260	275	1646	356	83	56	85	59	74	-0.050	14.9	1.67
125	20.473	21.666	0.16	0.18	2.23	81	0.21	1.79	78	-3.5	97	0.090	100	101	8.6	-0.11	334	244	268	276	260	276	1635	357	83	56	86	59	75	-0.050	14.88	1.9
126	20.637	21.840	0.16	0.17	2.22	81	0.05	1.80	78	-3.4	97	0.090	100	100	8.5	-0.09	337	243	268	277	260	277	1614	356	83	56	86	59	75	-0.050	14.73	2.09
127	20.800	22.014	0.16	0.17	2.27	81	0.45	1.80	78	-3.3	97	0.090	99	100	8.4	-0.15	341	244	270	277	261	279	1611	356	83	56	86	59	76	-0.049	14.71	2.45
128	20.965	22.189	0.16	0.18	2.28	81	-0.02	1.79	78	-3.3	97	0.090	100	101	8.2	-0.11	345	245	272	278	262	280	1605	356	84	56	86	59	77	-0.050	14.77	2.3
129	21.131	22.363	0.17	0.17	2.28	80	0.16	1.80	78	-3.3	97	0.090	101	100	8.2	-0.09	350	246	274	278	262	282	1597	355	84	56	87	59	76	-0.050	14.85	1.98
130	21.298	22.538	0.17	0.18	2.27	81	0.31	1.79	78	-3.4	97	0.090	102	101	8.0	-0.11	354	247	277	278	262	284	1601	353	84	56	87	59	75	-0.048	14.87	2.07
131	21.463	22.712	0.17	0.17	2.25	81	0.32	1.78	78	-3.4	97	0.090	100	100	8.0	-0.09	358	249	281	278	262	286	1600	351	84	56	86	59	75	-0.048	14.86	1.88
132	21.628	22.887	0.16	0.18	2.27	81	0.12	1.79	79	-3.3	97	0.090	100	100	7.9	-0.07	360	250	285	277	263	287	1603	350	84	56	86	59	75	-0.051	14.71	1.34
133	21.793	23.061	0.16	0.17	2.28	81	-0.01	1.79	79	-3.3	96	0.090	100	100	7.8	-0.13	363	250	288	276	263	288	1594	346	84	56	86	59	75	-0.047	14.36	0.78
134	21.959	23.235	0.17	0.17	2.26	81	0.42	1.79	78	-3.3	96	0.080	107	106	7.7	-0.07	365	251	290	276	263	289	1601	345	84	57	86	59	76	-0.047	14.31	0.77
135	22.125	23.410	0.17	0.18	2.26	81	0.35	1.78	79	-3.3	97	0.090	101	100	7.6	-0.09	366	252	292	275	263	290	1610	345	84	57	86	59	76	-0.044	14.38	0.81
136	22.290	23.584	0.16	0.17	2.26	81	0.45	1.79	79	-3.5	97	0.090	100	100	7.5	-0.11	368	252	294	274	263	290	1614	344	84	57	86	59	75	-0.047	14.2	0.88
137	22.455	23.758	0.16	0.17	2.26	81	0.18	1.79	78	-3.3	97	0.080	106	106	7.4	-0.09	372	253	295	274	262	291	1596	343	84	57	86	59	74	-0.047	14.17	0.9
138	22.621	23.933	0.17	0.18	2.27	81	0.46	1.78	78	-3.5	97	0.090	101	101	7.3	-0.11	374	254	298	273	262	292	1600	345	84	57	85	59	75	-0.047	14.29	1.08
139	22.786	24.107	0.17	0.17	2.24	81	0.11	1.80	78	-3.3	97	0.080	106	106	7.3	-0.04	375	254	299	272	262	292	1598	346	84	57	85	59	75	-0.048	14.38	1.03
140	22.950	24.281	0.16	0.17	2.25	81	0.08	1.79	78	-3.4	97	0.080	106	106	7.1	-0.11	375	254	301	271	263	293	1597	347	84	57	85	60	75	-0.047	14.38	1.24
141	23.116	24.456	0.17	0.18	2.27	81	0.19	1.78	78	-3.4	97	0.090	101	101	7.1	-0.09	376	255	303	272	263	294	1594	345	83	57	85	60	76	-0.047	14.48	1.13
142	23.282	24.630	0.17	0.17	2.26	81	0.34	1.79	78	-3.3	96	0.090	101	100	6.9	-0.11	377	256	305	271	264	295	1590	344	83	57	85	60	76	-0.047	14.41	1.04
143	23.446	24.804	0.16	0.17	2.24	81	0.3	1.80	78	-3.3	96	0.090	100	100	6.9	-0.04	378	256	307	270	264	295	1584	342	83	57	85	60	76	-0.045	14.37	0.97

Wood Heater Test Data

7

Run: 4

Manufacturer: Hearth & Home
Model: Dauntless-CAT
Tracking No.: 2389
Project No.: 061WS104E
Test Date: 03-Oct-19
Beginning Clock Time: 13;04

Total Sampling Time: 449 min
Recording Interval: 1 min
Background Sample Volume: _____ cubic feet

Meter Box Y Factor: 0.992 (1) 0.989 (2) _____ (Amb)

Barometric Pressure:	Begin	Middle	End	Average
	29.52		29.46	29.49 0

OMNI Equipment Numbers: _____

PM Control Modules: 371, 372
Dilution Tunnel MW(dry): 29.00 lb/lb-mole
Dilution Tunnel MW(wet): 28.78 lb/lb-mole
Dilution Tunnel H2O: 2.00 percent
Dilution Tunnel Static: -0.280 "H2O
Tunnel Area: 0.19635 ft2
Pitot Tube Cp: 0.99

Avg. Tunnel Velocity: 19.48 ft/sec.
Initial Tunnel Flow: 209.0 scfm
Average Tunnel Flow: 212.8 scfm
Post-Test Leak Check (1): 0.000 cfm @ 6 in. Hg
Post-Test Leak Check (2): 0.000 cfm @ 8 in. Hg
Average Test Piece Fuel Moisture: 22.67 Dry Basis %

Technician Signature: _____

Velocity Traverse Data	Pt.1	Pt.2	Pt.3	Pt.4	Pt.5	Pt.6	Pt.7	Pt.8	Center	
Initial dP	0.074	0.084	0.078	0.072	0.074	0.082	0.082	0.080	0.086	"H2O
Temp:	85	85	85	85	85	85	85	85	85	°F

V_{strav} 19.06 ft/sec V_{scent} 19.89 ft/sec F_p 0.959

	Particulate Sampling Data														Fuel Weight (lb)		Temperature Data (°F)													Stack Gas Data		
Elapsed Time (min)	Gas Meter 1 (ft^3)	Gas Meter 2 (ft^3)	Sample Rate 1 (cfm)	Sample Rate 2 (cfm)	Orifice dH 1 ("H_2O)	Meter 1 Temp (°F)	Meter 1 Vacuum ("Hg)	Orifice dH 2 ("H_2O)	Meter 2 Temp (°F)	Meter 2 Vacuum ("Hg)	Dilution Tunnel (°F)	Dilution Tunnel Center dP	Pro. Rate 1	Pro. Rate 2	Scale Reading	Weight Change	Firebox Top	Firebox Bottom	Firebox Back	Firebox Left	Firebox Right	Avg. Stove Surface	Catalyst Exit	Stack	Filter 1	Dryer Exit 1	Filter 2	Dryer Exit 2	Ambient	Draft ("H_2O)	CO_2 (%)	CO (%)
144	23.611	24.978	0.16	0.17	2.25	81	0.29	1.79	78	-3.5	96	0.090	100	100	6.8	-0.11	379	257	309	270	264	296	1576	341	83	57	85	60	76	-0.046	14.24	0.89
145	23.776	25.153	0.16	0.17	2.27	81	-0.09	1.79	79	-3.5	96	0.080	106	106	6.7	-0.04	380	257	311	269	264	296	1565	340	83	57	85	60	76	-0.046	14.08	0.78
146	23.942	25.327	0.17	0.17	2.25	81	0.15	1.80	79	-3.4	97	0.090	101	100	6.7	-0.09	382	258	312	269	264	297	1552	339	84	57	85	60	76	-0.046	13.96	0.67
147	24.107	25.502	0.16	0.17	2.24	81	-0.07	1.79	78	-3.4	96	0.090	100	101	6.6	-0.07	384	258	314	269	264	298	1542	337	84	57	85	60	76	-0.045	13.85	0.56
148	24.271	25.676	0.16	0.17	2.26	81	0.27	1.79	79	-3.4	96	0.090	100	100	6.5	-0.09	385	259	316	268	264	298	1533	337	84	57	86	60	77	-0.045	13.74	0.46
149	24.436	25.850	0.16	0.17	2.26	81	0.34	1.80	78	-3.4	96	0.080	106	106	6.5	-0.04	387	259	319	268	265	300	1528	335	84	57	86	60	76	-0.045	13.59	0.41
150	24.602	26.024	0.17	0.17	2.26	81	0.24	1.79	79	-3.4	96	0.090	101	100	6.3	-0.11	388	260	320	267	264	300	1524	336	84	57	86	60	74	-0.045	13.53	0.38
151	24.766	26.198	0.16	0.17	2.24	81	0	1.79	78	-3.4	97	0.090	100	100	6.3	-0.04	391	260	323	266	264	301	1541	336	84	57	86	60	75	-0.045	13.49	0.37
152	24.931	26.373	0.17	0.18	2.25	81	0.04	1.79	79	-3.3	97	0.090	100	100	6.2	-0.11	395	261	325	265	263	302	1550	336	84	57	86	60	75	-0.045	13.54	0.39
153	25.096	26.546	0.16	0.17	2.26	81	0.31	1.80	78	-3.3	96	0.090	100	99	6.1	-0.09	399	261	327	265	263	303	1559	337	84	57	86	60	75	-0.045	13.77	0.4
154	25.261	26.721	0.16	0.18	2.26	81	-0.08	1.78	78	-3.3	96	0.090	100	101	6.0	-0.07	401	261	329	265	263	304	1569	338	84	57	86	60	75	-0.046	14	0.52
155	25.426	26.895	0.16	0.17	2.23	81	0.28	1.78	78	-3.3	96	0.090	100	100	6.0	-0.09	403	261	330	264	263	304	1577	340	84	57	86	60	75	-0.046	14.28	0.7
156	25.590	27.069	0.16	0.17	2.24	81	0.11	1.78	79	-3.3	96	0.080	106	106	5.8	-0.11	405	262	332	264	263	305	1578	341	84	57	86	60	76	-0.047	14.51	1.08
157	25.755	27.243	0.16	0.17	2.26	81	0.3	1.79	79	-3.5	96	0.090	100	100	5.8	-0.04	408	262	335	264	264	307	1572	340	84	57	86	60	76	-0.046	14.48	1.45
158	25.920	27.417	0.17	0.17	2.24	81	-0.04	1.79	79	-3.3	96	0.090	100	100	5.7	-0.09	410	263	337	265	265	308	1569	338	84	57	86	60	77	-0.045	14.37	1.56
159	26.084	27.592	0.16	0.17	2.24	81	0.39	1.79	78	-3.4	96	0.090	100	101	5.6	-0.07	412	263	339	265	264	309	1524	335	83	57	86	60	76	-0.045	14.32	1.25
160	26.249	27.766	0.16	0.17	2.25	81	0.34	1.80	79	-3.4	95	0.090	100	100	5.6	-0.04	414	264	341	263	264	309	1470	332	83	57	86	60	75	-0.044	14.11	0.63
161	26.414	27.941	0.17	0.18	2.25	81	-0.02	1.79	79	-3.5	95	0.090	100	100	5.6	-0.04	417	264	343	264	264	310	1423	330	83	58	85	60	76	-0.043	13.19	0.21
162	26.578	28.115	0.16	0.17	2.24	81	-0.06	1.79	79	-3.4	96	0.090	100	100	5.5	-0.07	420	265	344	263	265	311	1393	327	83	58	85	60	77	-0.043	12.19	0.06
163	26.743	28.289	0.16	0.17	2.24	81	0.18	1.77	79	-3.4	96	0.080	106	106	5.4	-0.04	423	265	345	262	264	312	1371	324	83	58	85	60	75	-0.042	11.51	0.02
164	26.908	28.463	0.17	0.17	2.25	81	0.33	1.79	79	-3.3	95	0.090	100	100	5.4	-0.04	425	265	347	261	264	312	1349	322	83	58	85	60	75	-0.042	11.02	0.01
165	27.073	28.638	0.16	0.18	2.24	81	-0.03	1.79	79	-3.5	95	0.090	100	100	5.4	-0.04	427	266	347	259	263	312	1330	320	84	58	85	60	75	-0.041	10.72	0.01
166	27.237	28.812	0.16	0.17	2.22	81	0.16	1.79	79	-3.5	95	0.080	106	106	5.3	-0.07	429	266	348	258	263	313	1308	319	84	58	85	60	75	-0.041	10.5	0.02
167	27.401	28.986	0.16	0.17	2.25	81	-0.02	1.79	79	-3.6	95	0.090	100	100	5.2	-0.04	429	266	349	256	264	313	1293	317	84	58	85	60	76	-0.041	10.18	0.03
168	27.566	29.161	0.16	0.18	2.25	81	0.46	1.80	79	-3.5	95	0.090	100	100	5.2	0.00	431	267	350	254	264	313	1284	316	84	58	85	60	76	-0.041	10.03	0.04
169	27.731	29.336	0.17	0.17	2.25	81	0.04	1.78	79	-3.5	95	0.090	100	100	5.2	-0.09	432	267	350	252	265	313	1278	314	84	58	85	60	77	-0.041	9.97	0.04
170	27.895	29.510	0.16	0.17	2.23	81	-0.01	1.80	79	-3.3	95	0.090	100	100	5.2	0.00	433	267	351	251	265	313	1274	312	84	58	85	60	77	-0.041	9.98	0.05
171	28.060	29.685	0.16	0.17	2.25	81	0.45	1.80	79	-3.4	94	0.090	100	100	5.1	-0.07	433	268	351	248	266	313	1273	310	84	58	86	60	76	-0.040	9.98	0.06
172	28.225	29.859	0.17	0.17	2.26	81	-0.09	1.78	79	-3.5	94	0.090	100	100	5.0	-0.04	433	268	352	247	265	313	1267	308	84	58	86	60	77	-0.040	9.98	0.06
173	28.390	30.034	0.16	0.17	2.24	81	0.45	1.79	79	-3.5	94	0.090	100	100	5.0	-0.04	433	268	352	246	264	313	1264	307	84	58	86	60	77	-0.040	10.03	0.06
174	28.554	30.208	0.16	0.17	2.24	81	0.05	1.80	79	-3.3	95	0.090	100	100	5.0	0.00	432	268	352	244	264	312	1261	306	84	58	86	60	78	-0.039	10.03	0.06
175	28.719	30.382	0.17	0.17	2.25	81	-0.06	1.79	79	-3.5	94	0.090	100	100	4.9	-0.11	432	269	352	242	264	312	1259	304	84	58	86	60	77	-0.039	10.05	0.07
176	28.884	30.557	0.16	0.17	2.24	81	0.08	1.79	79	-3.3	93	0.080	106	106	4.9	0.00	430	269	353	240	265	311	1252	303	84	58	86	60	76	-0.039	10.08	0.07
177	29.048	30.731	0.16	0.17	2.23	81	0.23	1.80	79	-3.3	94	0.090	99	100	4.8	-0.04	428	269	353	238	264	310	1244	303	83	58	86	60	75	-0.039	10.12	0.07
178	29.213	30.906	0.17	0.17	2.25	81	0.44	1.78	79	-3.5	94	0.090	100	100	4.8	-0.04	428	269	353	237	263	310	1240	302	83	58	86	60	76	-0.039	10.17	0.07
179	29.377	31.080	0.16	0.17	2.25	81	0.4	1.79	79	-3.3	94	0.090	99	100	4.7	-0.07	426	270	353	234	263	309	1240	301	83	59	86	60	75	-0.039	10.19	0.06

Wood Heater Test Data

7

Run: 4

Manufacturer: Hearth & Home
Model: Dauntless-CAT
Tracking No.: 2389
Project No.: 061WS104E
Test Date: 03-Oct-19
Beginning Clock Time: 13;04

Total Sampling Time: 449 min
Recording Interval: 1 min
Background Sample Volume: _____ cubic feet

Meter Box Y Factor: 0.992 (1) 0.989 (2) _____ (Amb)

Barometric Pressure:	Begin	Middle	End	Average
	29.52		29.46	29.49 0

OMNI Equipment Numbers: _____

PM Control Modules: 371, 372
Dilution Tunnel MW(dry): 29.00 lb/lb-mole
Dilution Tunnel MW(wet): 28.78 lb/lb-mole
Dilution Tunnel H2O: 2.00 percent
Dilution Tunnel Static: -0.280 "H2O
Tunnel Area: 0.19635 ft2
Pitot Tube Cp: 0.99

Avg. Tunnel Velocity: 19.48 ft/sec.
Initial Tunnel Flow: 209.0 scfm
Average Tunnel Flow: 212.8 scfm
Post-Test Leak Check (1): 0.000 cfm @ 6 in. Hg
Post-Test Leak Check (2): 0.000 cfm @ 8 in. Hg
Average Test Piece Fuel Moisture: 22.67 Dry Basis %

Technician Signature:

Velocity Traverse Data

	Pt.1	Pt.2	Pt.3	Pt.4	Pt.5	Pt.6	Pt.7	Pt.8	Center	
Initial dP	0.074	0.084	0.078	0.072	0.074	0.082	0.082	0.080	0.086	"H2O
Temp:	85	85	85	85	85	85	85	85	85	°F

V_{strav} 19.06 ft/sec V_{scent} 19.89 ft/sec F_p 0.959

Elapsed Time (min)	Particulate Sampling Data: Gas Meter 1 (ft^3)	Gas Meter 2 (ft^3)	Sample Rate 1 (cfm)	Sample Rate 2 (cfm)	Orifice dH 1 ("H_2O)	Meter 1 Temp (°F)	Meter 1 Vacuum ("Hg)	Orifice dH 2 ("H_2O)	Meter 2 Temp (°F)	Meter 2 Vacuum ("Hg)	Dilution Tunnel (°F)	Dilution Tunnel Center dP	Pro. Rate 1	Pro. Rate 2	Fuel Weight (lb): Scale Reading	Weight Change	Temperature Data (°F): Firebox Top	Firebox Bottom	Firebox Back	Firebox Left	Firebox Right	Avg. Stove Surface	Catalyst Exit	Stack	Filter 1	Dryer Exit 1	Filter 2	Dryer Exit 2	Ambient	Stack Gas Data: Draft ("H_2O)	CO_2 (%)	CO (%)
180	29.542	31.254	0.17	0.17	2.24	81	-0.06	1.80	79	-3.3	94	0.090	100	100	4.7	-0.04	425	270	354	233	263	309	1229	302	83	59	86	60	76	-0.038	10.15	0.06
181	29.707	31.429	0.16	0.17	2.24	81	0.38	1.79	79	-3.4	93	0.090	100	100	4.6	-0.04	422	270	354	231	263	308	1226	301	83	59	86	61	76	-0.039	10.08	0.07
182	29.871	31.603	0.16	0.17	2.25	81	0.37	1.79	79	-3.5	93	0.090	99	99	4.6	-0.04	420	270	355	231	264	308	1222	299	83	59	85	61	77	-0.038	10.1	0.07
183	30.036	31.778	0.17	0.17	2.26	81	0.33	1.79	79	-3.5	94	0.090	100	100	4.6	0.00	418	270	356	229	263	307	1223	297	83	59	85	61	77	-0.038	9.98	0.07
184	30.201	31.952	0.16	0.17	2.24	81	-0.06	1.79	79	-3.5	93	0.090	100	99	4.5	-0.07	418	270	356	228	263	307	1212	297	84	59	85	61	77	-0.038	9.92	0.08
185	30.365	32.126	0.16	0.17	2.24	81	0.31	1.80	79	-3.5	93	0.090	99	99	4.5	-0.04	416	271	356	227	263	307	1196	295	84	59	85	61	77	-0.037	9.85	0.08
186	30.530	32.301	0.17	0.18	2.24	81	0.45	1.79	79	-3.4	93	0.090	100	100	4.5	-0.04	414	271	356	226	263	306	1189	293	84	59	84	61	77	-0.037	9.74	0.08
187	30.695	32.475	0.16	0.17	2.24	81	0.1	1.79	79	-3.3	93	0.090	100	99	4.4	-0.04	413	271	356	225	263	306	1182	291	84	59	84	61	78	-0.037	9.68	0.07
188	30.859	32.650	0.16	0.17	2.23	81	0.15	1.80	79	-3.5	93	0.090	99	100	4.4	0.00	412	271	356	224	263	305	1176	289	84	59	84	61	78	-0.037	9.62	0.08
189	31.023	32.824	0.16	0.17	2.24	81	0.02	1.78	79	-3.3	93	0.090	99	99	4.3	-0.07	411	271	356	223	263	305	1171	289	84	59	84	61	77	-0.037	9.61	0.08
190	31.188	32.999	0.16	0.18	2.25	81	0.45	1.79	79	-3.3	93	0.090	100	100	4.3	0.00	410	271	356	222	263	304	1165	287	84	59	85	61	77	-0.036	9.55	0.09
191	31.353	33.173	0.17	0.17	2.24	81	0	1.79	79	-3.3	93	0.090	100	99	4.3	-0.04	409	271	356	221	262	304	1162	287	84	59	85	61	75	-0.036	9.52	0.08
192	31.517	33.347	0.16	0.17	2.24	81	0.37	1.78	79	-3.4	93	0.090	99	99	4.3	-0.04	408	271	356	219	261	303	1157	287	84	59	85	61	74	-0.035	9.59	0.08
193	31.682	33.522	0.16	0.17	2.25	81	0.15	1.78	79	-3.3	93	0.090	100	100	4.2	-0.04	406	271	356	218	261	302	1152	287	84	59	85	61	75	-0.035	9.71	0.06
194	31.847	33.696	0.17	0.17	2.25	81	0.25	1.80	79	-3.3	92	0.080	106	105	4.1	-0.07	403	271	355	216	261	301	1147	287	83	59	86	61	76	-0.036	9.71	0.06
195	32.012	33.871	0.16	0.18	2.22	81	0.31	1.78	79	-3.5	92	0.090	100	100	4.1	0.00	402	271	355	215	262	301	1143	285	83	59	86	61	77	-0.035	9.62	0.06
196	32.176	34.045	0.16	0.17	2.25	81	0.12	1.79	79	-3.5	92	0.090	99	99	4.1	-0.04	401	271	356	215	262	301	1140	284	83	59	86	61	77	-0.035	9.56	0.05
197	32.340	34.219	0.16	0.17	2.24	81	0.33	1.80	79	-3.3	92	0.090	99	99	4.1	-0.04	400	271	355	214	262	300	1135	283	83	59	86	61	77	-0.035	9.55	0.06
198	32.506	34.394	0.17	0.17	2.26	81	0.01	1.79	79	-3.4	92	0.080	107	106	4.0	-0.07	400	271	355	213	262	300	1127	282	83	59	86	61	77	-0.036	9.58	0.06
199	32.670	34.568	0.16	0.17	2.23	81	0.38	1.78	79	-3.3	92	0.090	99	99	4.0	0.00	400	271	354	212	262	300	1126	280	83	59	86	61	78	-0.035	9.6	0.06
200	32.834	34.743	0.16	0.18	2.24	81	0.41	1.79	79	-3.4	92	0.090	99	100	3.9	-0.04	399	271	354	212	262	300	1123	279	83	59	86	61	77	-0.034	9.53	0.06
201	32.998	34.917	0.16	0.17	2.25	81	-0.01	1.79	79	-3.5	92	0.090	99	99	3.9	-0.04	399	271	354	211	261	299	1122	279	83	59	86	61	77	-0.035	9.56	0.07
202	33.164	35.091	0.17	0.17	2.24	81	0.43	1.79	79	-3.3	92	0.090	100	99	3.9	0.00	399	271	353	210	261	299	1126	280	83	59	86	61	77	-0.034	9.56	0.07
203	33.328	35.266	0.16	0.17	2.24	81	-0.02	1.79	79	-3.3	92	0.090	99	100	3.9	-0.04	399	272	353	209	261	299	1125	278	84	59	85	61	78	-0.034	9.6	0.08
204	33.492	35.440	0.16	0.17	2.24	81	0.46	1.79	79	-3.3	92	0.090	99	99	3.8	-0.07	399	272	353	208	261	299	1122	276	84	60	85	61	78	-0.034	9.47	0.08
205	33.657	35.614	0.16	0.17	2.25	81	0.08	1.78	79	-3.3	92	0.090	100	99	3.7	-0.04	399	272	352	207	261	298	1126	277	84	60	85	61	75	-0.034	9.47	0.08
206	33.822	35.788	0.17	0.17	2.22	81	-0.08	1.78	79	-3.2	92	0.080	106	105	3.7	0.00	399	272	352	206	260	298	1123	277	84	60	85	61	75	-0.034	9.51	0.08
207	33.986	35.963	0.16	0.18	2.24	81	0.03	1.78	79	-3.3	92	0.090	99	100	3.7	-0.04	399	271	351	205	259	297	1121	277	84	60	84	61	75	-0.035	9.52	0.08
208	34.151	36.137	0.17	0.17	2.23	81	0.31	1.79	79	-3.4	91	0.090	100	99	3.7	-0.04	399	271	351	204	259	297	1121	277	84	60	84	61	75	-0.032	9.62	0.08
209	34.315	36.311	0.16	0.17	2.24	81	-0.03	1.79	79	-3.4	92	0.090	99	99	3.6	-0.07	401	271	351	204	259	297	1120	277	84	60	84	61	76	-0.034	9.56	0.1
210	34.479	36.486	0.16	0.17	2.22	81	0.07	1.79	79	-3.3	91	0.080	105	106	3.6	0.00	401	272	351	204	259	297	1119	275	84	60	84	61	77	-0.034	9.53	0.11
211	34.643	36.660	0.16	0.17	2.24	81	0.45	1.80	79	-3.5	91	0.080	105	105	3.5	-0.04	401	273	351	203	259	297	1118	276	83	60	84	61	77	-0.034	9.56	0.14
212	34.808	36.835	0.16	0.18	2.24	81	0.28	1.79	79	-3.3	91	0.090	100	100	3.5	-0.04	401	273	351	203	259	297	1119	275	83	60	84	61	77	-0.034	9.54	0.16
213	34.973	37.009	0.16	0.17	2.23	81	0.41	1.78	79	-3.3	91	0.090	100	99	3.5	0.00	399	273	351	203	259	297	1117	277	83	60	85	61	77	-0.042	9.68	0.17
214	35.137	37.183	0.16	0.17	2.23	81	0.3	1.79	79	-3.5	91	0.090	99	99	3.4	-0.11	401	274	351	203	259	298	1111	273	83	60	85	61	77	-0.033	9.68	0.19
215	35.301	37.358	0.16	0.17	2.24	81	0.28	1.79	79	-3.4	91	0.090	99	100	3.4	0.00	403	274	351	202	259	298	1109	271	83	60	85	61	76	-0.034	9.81	0.21

Wood Heater Test Data

7

Run: 4

Manufacturer: Hearth & Home
Model: Dauntless-CAT
Tracking No.: 2389
Project No.: 061WS104E
Test Date: 03-Oct-19
Beginning Clock Time: 13;04

Total Sampling Time: 449 min
Recording Interval: 1 min
Background Sample Volume: _____ cubic feet

Meter Box Y Factor: 0.992 (1) 0.989 (2) _____ (Amb)

Barometric Pressure:	Begin	Middle	End	Average
	29.52		29.46	29.49 0

OMNI Equipment Numbers: _____

PM Control Modules: 371, 372
Dilution Tunnel MW(dry): 29.00 lb/lb-mole
Dilution Tunnel MW(wet): 28.78 lb/lb-mole
Dilution Tunnel H2O: 2.00 percent
Dilution Tunnel Static: -0.280 "H2O
Tunnel Area: 0.19635 ft2
Pitot Tube Cp: 0.99

Avg. Tunnel Velocity: 19.48 ft/sec.
Initial Tunnel Flow: 209.0 scfm
Average Tunnel Flow: 212.8 scfm
Post-Test Leak Check (1): 0.000 cfm @ 6 in. Hg
Post-Test Leak Check (2): 0.000 cfm @ 8 in. Hg
Average Test Piece Fuel Moisture: 22.67 Dry Basis %

Technician Signature: _____

Velocity Traverse Data

	Pt.1	Pt.2	Pt.3	Pt.4	Pt.5	Pt.6	Pt.7	Pt.8	Center	
Initial dP	0.074	0.084	0.078	0.072	0.074	0.082	0.082	0.080	0.086	"H2O
Temp:	85	85	85	85	85	85	85	85	85	°F

V_{strav} 19.06 ft/sec V_{scent} 19.89 ft/sec F_p 0.959

	Particulate Sampling Data														Fuel Weight (lb)		Temperature Data (°F)													Stack Gas Data		
Elapsed Time (min)	Gas Meter 1 (ft^3)	Gas Meter 2 (ft^3)	Sample Rate 1 (cfm)	Sample Rate 2 (cfm)	Orifice dH 1 ("H_2O)	Meter 1 Temp (°F)	Meter 1 Vacuum ("Hg)	Orifice dH 2 ("H_2O)	Meter 2 Temp (°F)	Meter 2 Vacuum ("Hg)	Dilution Tunnel (°F)	Dilution Tunnel Center dP	Pro. Rate 1	Pro. Rate 2	Scale Reading	Weight Change	Firebox Top	Firebox Bottom	Firebox Back	Firebox Left	Firebox Right	Avg. Stove Surface	Catalyst Exit	Stack	Filter 1	Dryer Exit 1	Filter 2	Dryer Exit 2	Ambient	Draft ("H_2O)	CO_2 (%)	CO (%)
216	35.466	37.532	0.16	0.17	2.24	81	0.41	1.79	79	-3.3	91	0.090	100	99	3.3	-0.04	402	274	350	201	259	297	1109	272	83	60	86	61	77	-0.031	9.82	0.24
217	35.630	37.707	0.16	0.18	2.22	81	0.32	1.78	79	-3.3	91	0.090	99	100	3.3	-0.04	403	275	350	201	259	298	1115	272	83	60	86	61	77	-0.033	9.84	0.26
218	35.794	37.881	0.16	0.17	2.23	81	0.3	1.79	79	-3.3	91	0.090	99	99	3.2	-0.11	402	275	350	201	259	297	1123	274	83	60	86	61	76	-0.036	9.98	0.26
219	35.958	38.055	0.16	0.17	2.24	81	-0.08	1.78	79	-3.5	90	0.090	99	99	3.2	0.00	402	276	350	200	258	297	1128	271	83	60	86	62	75	-0.034	10.07	0.27
220	36.123	38.230	0.16	0.17	2.22	81	0.4	1.78	79	-3.5	91	0.090	100	100	3.2	-0.04	404	276	350	200	258	298	1134	273	84	60	86	62	75	-0.031	10.13	0.28
221	36.286	38.404	0.16	0.17	2.23	81	0.42	1.80	79	-3.5	91	0.090	99	99	3.1	-0.04	406	277	350	199	258	298	1141	274	84	60	86	62	76	-0.034	10.26	0.3
222	36.451	38.579	0.16	0.17	2.22	81	0.27	1.79	79	-3.3	91	0.090	100	100	3.1	0.00	407	277	350	199	258	298	1136	273	84	60	86	62	76	-0.034	10.2	0.34
223	36.616	38.753	0.16	0.17	2.23	81	-0.03	1.78	79	-3.3	91	0.090	100	99	3.0	-0.07	408	276	349	199	258	298	1141	275	84	60	86	62	77	-0.034	10.24	0.34
224	36.779	38.927	0.16	0.17	2.22	81	0.32	1.79	79	-3.4	90	0.090	98	99	3.0	-0.04	410	277	349	200	258	299	1143	272	84	60	85	62	78	-0.032	10.21	0.37
225	36.943	39.101	0.16	0.17	2.23	81	0.43	1.79	79	-3.5	91	0.090	99	99	3.0	-0.04	411	278	349	200	258	299	1139	271	84	60	85	62	78	-0.032	10.23	0.36
226	37.107	39.275	0.16	0.17	2.24	81	0.02	1.79	79	-3.4	91	0.090	99	99	2.9	-0.04	412	278	349	201	258	300	1154	271	84	60	85	62	77	-0.033	10.2	0.4
227	37.271	39.450	0.16	0.18	2.21	81	0.45	1.79	79	-3.5	91	0.090	99	100	2.8	-0.07	412	278	349	201	258	300	1158	271	84	60	85	62	77	-0.032	10.38	0.43
228	37.435	39.624	0.16	0.17	2.22	81	0.22	1.80	79	-3.5	91	0.090	99	99	2.8	-0.04	414	279	348	201	258	300	1180	272	84	61	84	62	77	-0.034	10.52	0.43
229	37.599	39.799	0.16	0.17	2.23	81	0.15	1.78	79	-3.3	91	0.090	99	100	2.8	-0.04	413	279	348	201	258	300	1185	272	83	61	84	62	78	-0.033	10.73	0.4
230	37.764	39.973	0.17	0.17	2.22	81	-0.09	1.78	79	-3.3	91	0.090	100	99	2.7	-0.04	413	279	348	202	258	300	1200	273	83	61	84	62	78	-0.034	10.95	0.43
231	37.927	40.147	0.16	0.17	2.22	81	0.24	1.80	79	-3.5	90	0.090	98	99	2.6	-0.07	414	279	348	202	258	300	1201	275	83	61	84	62	77	-0.034	11.1	0.47
232	38.091	40.321	0.16	0.17	2.23	81	0.45	1.79	79	-3.5	91	0.090	99	99	2.6	-0.04	413	279	348	202	258	300	1180	274	83	61	84	62	77	-0.032	11.19	0.42
233	38.256	40.495	0.16	0.17	2.24	81	0.44	1.79	79	-3.3	91	0.090	100	99	2.6	0.00	413	280	348	202	257	300	1160	274	83	61	84	62	75	-0.034	10.88	0.41
234	38.420	40.670	0.16	0.18	2.22	81	0.25	1.79	79	-3.3	90	0.090	99	100	2.6	-0.04	412	280	348	201	257	300	1139	275	83	61	85	62	75	-0.033	10.55	0.34
235	38.584	40.844	0.16	0.17	2.23	81	0.31	1.80	79	-3.5	90	0.090	99	99	2.5	-0.07	408	280	347	201	257	299	1115	275	83	61	85	62	76	-0.033	10.1	0.29
236	38.748	41.019	0.16	0.17	2.24	81	0.2	1.79	79	-3.3	90	0.090	99	100	2.5	0.00	405	278	346	200	256	297	1093	274	83	61	85	62	76	-0.033	9.62	0.21
237	38.913	41.193	0.16	0.17	2.23	81	-0.02	1.79	79	-3.5	90	0.090	100	99	2.4	-0.04	401	278	345	200	256	296	1071	272	83	61	85	62	76	-0.032	9.29	0.15
238	39.077	41.367	0.16	0.17	2.23	81	0.41	1.80	79	-3.3	90	0.090	99	99	2.4	0.00	400	279	344	200	257	296	1055	271	84	61	86	62	77	-0.032	8.95	0.13
239	39.241	41.543	0.16	0.18	2.23	81	0.2	1.80	79	-3.5	90	0.090	99	100	2.4	-0.04	398	278	343	199	256	295	1042	269	84	61	86	62	76	-0.031	8.55	0.13
240	39.406	41.717	0.16	0.17	2.24	81	0.3	1.78	79	-3.5	90	0.090	100	99	2.4	0.00	396	278	342	198	256	294	1028	267	84	61	86	62	77	-0.031	8.14	0.17
241	39.570	41.891	0.16	0.17	2.22	81	0.4	1.79	79	-3.3	90	0.090	99	99	2.4	-0.04	395	278	341	198	256	294	1008	264	84	61	86	62	77	-0.031	7.85	0.18
242	39.734	42.066	0.16	0.18	2.23	81	0.31	1.79	79	-3.3	90	0.090	99	100	2.4	0.00	394	278	340	197	256	293	992	262	84	61	86	62	77	-0.030	7.68	0.18
243	39.898	42.240	0.16	0.17	2.24	81	0.45	1.79	79	-3.3	89	0.090	99	99	2.4	0.00	393	278	340	196	256	293	978	260	84	61	86	62	77	-0.030	7.57	0.17
244	40.062	42.415	0.16	0.17	2.24	81	0.1	1.78	79	-3.5	90	0.090	99	100	2.3	-0.07	392	278	339	195	256	292	965	258	84	61	85	62	77	-0.030	7.49	0.17
245	40.226	42.589	0.16	0.17	2.23	81	0.36	1.80	79	-3.3	90	0.090	99	99	2.3	0.00	391	277	338	194	255	291	954	256	83	61	85	62	77	-0.029	7.43	0.17
246	40.391	42.764	0.16	0.18	2.23	81	0.31	1.79	79	-3.5	89	0.090	100	100	2.3	0.00	390	277	337	192	254	290	943	255	83	61	85	62	75	-0.029	7.39	0.16
247	40.556	42.938	0.16	0.17	2.23	81	0.39	1.79	79	-3.5	89	0.090	100	99	2.3	0.00	389	277	337	191	255	290	935	253	83	61	85	62	74	-0.029	7.31	0.16
248	40.719	43.113	0.16	0.17	2.22	81	0.17	1.80	79	-3.5	89	0.090	98	100	2.2	-0.04	388	277	336	189	255	289	926	253	83	61	85	62	75	-0.029	7.34	0.16
249	40.883	43.288	0.16	0.17	2.23	81	-0.09	1.78	79	-3.3	89	0.090	99	100	2.2	0	386	277	335	188	255	288	918	251	83	61	84	62	75	-0.029	7.29	0.16
250	41.048	43.462	0.16	0.17	2.24	81	-0.07	1.79	79	-3.5	89	0.090	100	99	2.2	0	385	276	334	187	253	287	908	251	83	61	84	62	76	-0.028	7.23	0.16
251	41.213	43.637	0.16	0.17	2.24	81	0.35	1.79	79	-3.5	89	0.080	106	106	2.2	-0.04	384	276	334	186	252	286	900	248	83	61	84	63	76	-0.028	7.18	0.15

Wood Heater Test Data

7

Run: 4

Manufacturer: Hearth & Home
Model: Dauntless-CAT
Tracking No.: 2389
Project No.: 061WS104E
Test Date: 03-Oct-19
Beginning Clock Time: 13;04

Total Sampling Time: 449 min
Recording Interval: 1 min
Background Sample Volume: _____ cubic feet

Meter Box Y Factor: 0.992 (1) 0.989 (2) _____ (Amb)

Barometric Pressure:	Begin	Middle	End	Average
	29.52		29.46	29.49 0

OMNI Equipment Numbers: _____

PM Control Modules: 371, 372
Dilution Tunnel MW(dry): 29.00 lb/lb-mole
Dilution Tunnel MW(wet): 28.78 lb/lb-mole
Dilution Tunnel H2O: 2.00 percent
Dilution Tunnel Static: -0.280 "H2O
Tunnel Area: 0.19635 ft2
Pitot Tube Cp: 0.99

Avg. Tunnel Velocity: 19.48 ft/sec.
Initial Tunnel Flow: 209.0 scfm
Average Tunnel Flow: 212.8 scfm
Post-Test Leak Check (1): 0.000 cfm @ 6 in. Hg
Post-Test Leak Check (2): 0.000 cfm @ 8 in. Hg
Average Test Piece Fuel Moisture: 22.67 Dry Basis %

Technician Signature: _____

Velocity Traverse Data

	Pt.1	Pt.2	Pt.3	Pt.4	Pt.5	Pt.6	Pt.7	Pt.8	Center	
Initial dP	0.074	0.084	0.078	0.072	0.074	0.082	0.082	0.080	0.086	"H2O
Temp:	85	85	85	85	85	85	85	85	85	°F

V_{strav} 19.06 ft/sec V_{scent} 19.89 ft/sec F_p 0.959

Elapsed Time (min)	Particulate Sampling Data: Gas Meter 1 (ft^3)	Gas Meter 2 (ft^3)	Sample Rate 1 (cfm)	Sample Rate 2 (cfm)	Orifice dH 1 ("H_2O)	Meter 1 Temp (°F)	Meter 1 Vacuum ("Hg)	Orifice dH 2 ("H_2O)	Meter 2 Temp (°F)	Meter 2 Vacuum ("Hg)	Dilution Tunnel (°F)	Dilution Tunnel Center dP	Pro. Rate 1	Pro. Rate 2	Fuel Weight (lb): Scale Reading	Weight Change	Temperature Data (°F): Firebox Top	Firebox Bottom	Firebox Back	Firebox Left	Firebox Right	Avg. Stove Surface	Catalyst Exit	Stack	Filter 1	Dryer Exit 1	Filter 2	Dryer Exit 2	Ambient	Stack Gas Data: Draft ("H_2O)	CO_2 (%)	CO (%)
252	41.377	43.811	0.16	0.17	2.23	81	0.4	1.80	79	-3.3	88	0.090	99	99	2.2	0.00	384	277	333	184	253	286	892	247	83	62	84	63	76	-0.028	7.17	0.15
253	41.541	43.986	0.16	0.17	2.23	81	0.32	1.79	79	-3.5	88	0.090	99	100	2.2	0.00	383	277	332	183	253	286	885	246	83	61	84	63	76	-0.027	7.11	0.15
254	41.706	44.161	0.17	0.18	2.22	81	0.02	1.79	79	-3.3	88	0.090	100	100	2.2	-0.04	382	277	332	182	252	285	877	244	83	62	84	63	76	-0.027	7.07	0.15
255	41.869	44.335	0.16	0.17	2.23	81	0.32	1.79	79	-3.3	88	0.090	98	99	2.2	0.00	381	277	331	181	252	284	871	243	84	62	84	63	77	-0.027	7.06	0.15
256	42.033	44.510	0.16	0.17	2.23	81	0.19	1.79	79	-3.3	88	0.090	99	100	2.2	0.00	380	277	330	180	252	284	866	241	84	62	85	63	77	-0.027	7.01	0.15
257	42.198	44.685	0.16	0.18	2.24	81	0.45	1.79	79	-3.6	88	0.090	100	100	2.1	-0.07	379	277	329	179	252	283	860	240	84	62	85	63	77	-0.026	6.99	0.15
258	42.363	44.859	0.16	0.17	2.24	81	0.41	1.81	79	-3.3	88	0.090	100	99	2.1	0.00	378	277	329	178	252	283	855	238	84	62	85	63	77	-0.026	6.98	0.15
259	42.527	45.034	0.16	0.17	2.23	81	0.31	1.79	79	-3.3	89	0.090	99	100	2.1	0.00	377	277	328	177	251	282	849	237	84	62	86	63	77	-0.025	6.93	0.16
260	42.691	45.209	0.16	0.18	2.23	81	-0.06	1.79	79	-3.4	88	0.090	99	100	2.0	-0.04	376	277	327	176	251	281	843	236	84	62	86	63	75	-0.026	6.92	0.16
261	42.856	45.384	0.16	0.17	2.23	81	0.35	1.80	79	-3.6	88	0.090	100	100	2.0	0.00	376	277	327	174	251	281	838	235	84	62	86	63	74	-0.025	6.92	0.16
262	43.020	45.559	0.16	0.17	2.22	81	-0.09	1.79	79	-3.4	88	0.090	99	100	2.0	0.00	376	276	326	173	251	280	832	235	83	62	86	63	75	-0.025	6.85	0.16
263	43.184	45.733	0.16	0.17	2.23	81	-0.1	1.79	79	-3.3	88	0.090	99	99	2.0	0.00	373	277	326	172	251	280	827	234	83	62	86	63	76	-0.025	6.82	0.16
264	43.348	45.908	0.16	0.18	2.24	81	0.43	1.78	79	-3.3	87	0.090	99	100	2.0	-0.04	373	276	325	171	251	279	823	232	83	62	85	63	75	-0.025	6.8	0.16
265	43.513	46.082	0.16	0.17	2.24	81	0.42	1.80	79	-3.5	88	0.090	100	99	2.0	0.00	372	276	324	170	250	278	818	232	83	62	85	63	76	-0.025	6.8	0.15
266	43.677	46.257	0.16	0.17	2.24	81	0.44	1.79	79	-3.5	87	0.090	99	100	2.0	0.00	372	277	323	169	250	278	814	230	83	62	85	63	77	-0.025	6.8	0.15
267	43.841	46.432	0.16	0.18	2.24	81	0.39	1.78	79	-3.4	88	0.090	99	100	2.0	0.00	372	277	322	169	250	278	811	229	83	62	85	63	77	-0.024	6.78	0.16
268	44.007	46.606	0.17	0.17	2.24	81	0.36	1.79	79	-3.3	88	0.090	100	99	1.9	-0.07	371	277	322	168	250	278	806	227	83	62	85	63	77	-0.024	6.77	0.16
269	44.171	46.781	0.16	0.17	2.22	81	0.19	1.79	79	-3.5	88	0.090	99	100	1.9	0.00	371	277	321	168	249	277	804	226	83	62	84	63	76	-0.024	6.75	0.17
270	44.335	46.956	0.16	0.18	2.23	81	0.42	1.79	79	-3.3	88	0.090	99	100	1.9	0.00	370	277	320	167	249	277	804	226	83	62	84	63	77	-0.024	6.75	0.16
271	44.499	47.130	0.16	0.17	2.24	81	0.45	1.80	79	-3.5	87	0.090	99	99	1.9	-0.04	371	277	320	166	249	277	803	225	83	62	84	63	75	-0.024	6.77	0.18
272	44.664	47.305	0.16	0.17	2.23	81	0.44	1.79	79	-3.5	87	0.090	99	100	1.9	0.00	369	277	319	165	248	276	800	224	83	62	84	63	76	-0.024	6.75	0.18
273	44.828	47.480	0.16	0.17	2.23	81	0	1.79	79	-3.5	87	0.090	99	100	1.9	0.00	369	277	319	165	248	276	796	224	84	62	84	63	76	-0.023	6.68	0.19
274	44.992	47.654	0.16	0.17	2.24	81	-0.02	1.80	79	-3.3	87	0.090	99	99	1.9	0.00	369	277	318	163	248	275	793	223	84	62	84	63	74	-0.023	6.64	0.19
275	45.157	47.829	0.16	0.17	2.25	81	0.09	1.79	79	-3.5	87	0.090	99	100	1.9	-0.04	369	277	318	163	248	275	789	223	84	62	84	63	75	-0.023	6.66	0.19
276	45.321	48.003	0.16	0.17	2.22	81	0.03	1.79	79	-3.5	87	0.090	99	99	1.9	0.00	368	276	317	162	247	274	784	222	84	62	84	63	75	-0.023	6.61	0.19
277	45.485	48.178	0.16	0.17	2.23	81	0	1.79	79	-3.3	87	0.090	99	100	1.9	0.00	366	277	316	161	247	273	780	222	83	62	85	63	76	-0.023	6.52	0.19
278	45.649	48.353	0.16	0.18	2.24	81	0.07	1.80	79	-3.3	87	0.090	99	100	1.8	-0.04	366	276	315	160	246	273	774	222	83	62	85	63	75	-0.023	6.54	0.19
279	45.815	48.527	0.17	0.17	2.23	81	0.43	1.80	79	-3.5	87	0.090	100	99	1.8	0.00	366	277	314	160	246	273	769	220	83	62	85	63	77	-0.023	6.53	0.19
280	45.979	48.702	0.16	0.17	2.23	81	0.33	1.79	79	-3.3	87	0.090	99	100	1.8	0.00	366	277	314	160	246	273	764	218	83	62	85	63	77	-0.022	6.47	0.18
281	46.143	48.877	0.16	0.18	2.24	81	0.12	1.79	79	-3.5	87	0.090	99	100	1.8	0.00	365	277	313	159	246	272	759	217	83	62	85	63	77	-0.022	6.45	0.18
282	46.307	49.052	0.16	0.17	2.24	81	-0.09	1.80	79	-3.4	87	0.090	99	100	1.8	0.00	365	277	312	159	246	272	756	216	83	62	85	63	76	-0.022	6.43	0.18
283	46.472	49.227	0.16	0.17	2.21	81	0.21	1.79	79	-3.3	87	0.090	99	100	1.7	-0.07	364	277	311	158	246	271	753	216	83	62	85	64	77	-0.022	6.38	0.18
284	46.636	49.401	0.16	0.17	2.23	81	0.4	1.81	79	-3.5	87	0.090	99	99	1.7	0.00	364	277	311	157	245	271	748	214	83	62	85	64	77	-0.022	6.42	0.18
285	46.800	49.576	0.16	0.17	2.24	81	0.44	1.79	79	-3.4	86	0.090	99	99	1.7	0.00	364	276	310	157	245	270	744	214	83	62	85	64	77	-0.021	6.38	0.18
286	46.966	49.750	0.17	0.17	2.22	81	0.21	1.79	79	-3.3	86	0.090	100	99	1.7	0.00	364	276	309	156	244	270	741	213	83	62	85	64	76	-0.021	6.34	0.18
287	47.130	49.925	0.16	0.17	2.22	81	0.24	1.80	79	-3.5	86	0.090	99	99	1.7	-0.04	363	276	308	156	244	269	736	212	83	62	85	64	75	-0.021	6.32	0.18

Wood Heater Test Data

7

Run: 4

Manufacturer: Hearth & Home
Model: Dauntless-CAT
Tracking No.: 2389
Project No.: 061WS104E
Test Date: 03-Oct-19
Beginning Clock Time: 13;04

Total Sampling Time: 449 min
Recording Interval: 1 min
Background Sample Volume: _____ cubic feet

Meter Box Y Factor: 0.992 (1) 0.989 (2) _____ (Amb)

Barometric Pressure:	Begin	Middle	End	Average
	29.52		29.46	29.49 0

OMNI Equipment Numbers: _____

PM Control Modules: 371, 372
Dilution Tunnel MW(dry): 29.00 lb/lb-mole
Dilution Tunnel MW(wet): 28.78 lb/lb-mole
Dilution Tunnel H2O: 2.00 percent
Dilution Tunnel Static: -0.280 "H2O
Tunnel Area: 0.19635 ft2
Pitot Tube Cp: 0.99

Avg. Tunnel Velocity: 19.48 ft/sec.
Initial Tunnel Flow: 209.0 scfm
Average Tunnel Flow: 212.8 scfm
Post-Test Leak Check (1): 0.000 cfm @ 6 in. Hg
Post-Test Leak Check (2): 0.000 cfm @ 8 in. Hg
Average Test Piece Fuel Moisture: 22.67 Dry Basis %

Technician Signature:

Velocity Traverse Data

	Pt.1	Pt.2	Pt.3	Pt.4	Pt.5	Pt.6	Pt.7	Pt.8	Center	
Initial dP	0.074	0.084	0.078	0.072	0.074	0.082	0.082	0.080	0.086	"H2O
Temp:	85	85	85	85	85	85	85	85	85	°F

V_{strav} 19.06 ft/sec V_{scent} 19.89 ft/sec F_p 0.959

Elapsed Time (min)	Particulate Sampling Data: Gas Meter 1 (ft^3)	Gas Meter 2 (ft^3)	Sample Rate 1 (cfm)	Sample Rate 2 (cfm)	Orifice dH 1 ("H_2O)	Meter 1 Temp (°F)	Meter 1 Vacuum ("Hg)	Orifice dH 2 ("H_2O)	Meter 2 Temp (°F)	Meter 2 Vacuum ("Hg)	Dilution Tunnel (°F)	Dilution Tunnel Center dP	Pro. Rate 1	Pro. Rate 2	Fuel Weight (lb): Scale Reading	Weight Change	Temperature Data (°F): Firebox Top	Firebox Bottom	Firebox Back	Firebox Left	Firebox Right	Avg. Stove Surface	Catalyst Exit	Stack	Filter 1	Dryer Exit 1	Filter 2	Dryer Exit 2	Ambient	Stack Gas Data: Draft ("H_2O)	CO_2 (%)	CO (%)
288	47.293	50.100	0.16	0.18	2.24	81	-0.09	1.79	79	-3.5	86	0.080	104	105	1.7	0.00	363	276	308	155	244	269	733	212	83	62	84	64	74	-0.021	6.3	0.17
289	47.458	50.274	0.16	0.17	2.24	81	-0.09	1.79	79	-3.3	86	0.090	99	99	1.7	0.00	363	276	307	154	243	269	729	212	83	62	84	64	75	-0.021	6.3	0.18
290	47.623	50.449	0.16	0.17	2.21	81	0.45	1.79	79	-3.4	86	0.090	99	99	1.7	-0.04	362	276	306	153	243	268	726	212	84	63	84	64	75	-0.021	6.28	0.18
291	47.787	50.624	0.16	0.18	2.22	81	0.42	1.80	79	-3.4	86	0.090	99	99	1.7	0.00	361	275	305	152	242	267	721	211	84	63	84	64	75	-0.021	6.27	0.17
292	47.951	50.798	0.16	0.17	2.23	81	0.36	1.79	79	-3.3	86	0.090	99	99	1.7	0.00	361	275	304	152	241	267	717	211	84	63	84	64	76	-0.021	6.27	0.17
293	48.116	50.974	0.16	0.18	2.21	81	-0.09	1.79	79	-3.3	85	0.080	105	106	1.7	0.00	361	275	304	152	241	267	714	210	83	63	84	64	76	-0.021	6.26	0.17
294	48.279	51.148	0.16	0.17	2.22	81	0.05	1.80	79	-3.3	86	0.090	98	99	1.6	-0.04	362	275	303	151	240	266	711	208	83	63	84	64	76	-0.020	6.25	0.17
295	48.443	51.323	0.16	0.17	2.24	81	0.37	1.80	79	-3.5	85	0.090	99	99	1.6	0.00	362	275	302	151	239	266	708	208	83	63	84	64	76	-0.020	6.26	0.17
296	48.608	51.498	0.16	0.17	2.24	81	0.02	1.79	79	-3.3	85	0.090	99	99	1.6	0.00	362	275	302	151	239	266	705	208	83	63	84	64	76	-0.020	6.26	0.17
297	48.773	51.672	0.17	0.17	2.21	81	0.44	1.81	79	-3.3	85	0.090	99	99	1.6	0.00	361	275	301	151	239	265	702	207	83	63	85	64	76	-0.020	6.26	0.17
298	48.937	51.847	0.16	0.18	2.22	81	-0.04	1.79	79	-3.3	85	0.090	99	99	1.5	-0.07	362	275	300	150	238	265	700	206	83	63	85	64	76	-0.020	6.26	0.17
299	49.101	52.022	0.16	0.17	2.24	81	0.32	1.79	79	-3.3	85	0.090	99	99	1.5	0.00	362	275	300	150	238	265	698	206	83	63	85	64	76	-0.020	6.29	0.17
300	49.266	52.197	0.16	0.18	2.22	81	-0.06	1.81	79	-3.4	86	0.090	99	99	1.5	0.00	362	275	299	149	237	264	696	206	83	63	85	64	75	-0.020	6.3	0.17
301	49.430	52.372	0.16	0.17	2.22	81	0.45	1.79	79	-3.5	85	0.090	99	99	1.5	0.00	362	275	298	148	237	264	694	205	83	63	85	64	75	-0.019	6.27	0.17
302	49.594	52.546	0.16	0.17	2.23	81	0.25	1.79	79	-3.3	86	0.090	99	99	1.5	-0.04	363	275	297	148	237	264	692	204	83	63	85	64	75	-0.019	6.27	0.17
303	49.758	52.721	0.16	0.17	2.24	81	-0.1	1.78	79	-3.3	85	0.090	99	99	1.5	0.00	362	275	297	147	237	264	690	204	83	63	85	64	75	-0.019	6.33	0.18
304	49.923	52.896	0.16	0.18	2.23	81	-0.08	1.79	79	-3.3	85	0.080	105	105	1.5	0.00	361	274	296	147	236	263	687	204	83	63	85	64	75	-0.019	6.27	0.17
305	50.087	53.071	0.16	0.17	2.23	81	-0.06	1.79	79	-3.5	85	0.090	99	99	1.5	0.00	361	274	295	146	235	262	684	203	83	63	85	64	76	-0.019	6.24	0.17
306	50.251	53.246	0.16	0.18	2.23	81	-0.06	1.77	79	-3.3	85	0.090	99	99	1.5	-0.04	360	274	294	146	235	262	682	202	83	63	85	64	75	-0.019	6.24	0.17
307	50.416	53.420	0.16	0.17	2.22	81	0.45	1.80	79	-3.4	85	0.090	99	99	1.5	0.00	359	274	293	146	235	261	680	202	84	63	85	64	75	-0.019	6.25	0.17
308	50.580	53.595	0.16	0.17	2.22	81	-0.09	1.79	79	-3.5	85	0.090	99	99	1.5	0.00	359	273	293	145	235	261	677	201	84	63	84	64	75	-0.019	6.2	0.17
309	50.744	53.770	0.16	0.18	2.23	81	0.33	1.79	79	-3.3	85	0.090	99	99	1.4	-0.04	358	274	292	145	235	261	674	200	83	63	84	64	76	-0.019	6.18	0.18
310	50.908	53.944	0.16	0.17	2.24	81	0.44	1.80	79	-3.3	85	0.090	99	99	1.5	0.04	357	273	291	145	234	260	671	200	83	63	84	64	76	-0.019	6.18	0.18
311	51.073	54.119	0.16	0.17	2.23	81	0.38	1.79	79	-3.3	85	0.090	99	99	1.4	-0.04	356	273	290	144	234	259	669	200	83	63	84	64	75	-0.018	6.15	0.17
312	51.236	54.294	0.16	0.17	2.22	81	-0.07	1.79	79	-3.5	85	0.090	98	99	1.4	0.00	356	273	289	144	233	259	666	199	83	63	84	64	76	-0.018	6.14	0.18
313	51.401	54.468	0.17	0.17	2.23	81	0.39	1.80	79	-3.4	85	0.090	99	99	1.4	0.00	354	273	288	144	233	258	663	197	83	63	84	65	77	-0.018	6.11	0.17
314	51.566	54.644	0.16	0.18	2.21	81	0.03	1.79	79	-3.5	85	0.090	99	100	1.4	0.00	353	273	287	144	233	258	660	197	83	63	84	65	75	-0.018	6.05	0.17
315	51.730	54.818	0.16	0.17	2.22	81	-0.08	1.78	79	-3.5	85	0.090	99	99	1.3	-0.07	353	273	287	143	233	258	656	198	83	63	84	65	74	-0.018	6.02	0.17
316	51.893	54.993	0.16	0.18	2.23	81	0.45	1.79	79	-3.5	85	0.090	98	99	1.3	0.00	351	272	286	142	232	257	655	197	83	63	84	65	74	-0.018	5.98	0.17
317	52.058	55.168	0.16	0.17	2.24	81	-0.09	1.80	79	-3.3	85	0.090	99	99	1.3	0.00	351	273	285	142	232	257	655	197	83	63	84	65	75	-0.018	5.97	0.17
318	52.223	55.343	0.16	0.18	2.23	81	-0.09	1.79	79	-3.4	85	0.090	99	99	1.3	-0.04	352	272	284	141	231	256	676	197	83	63	85	65	75	-0.018	5.95	0.17
319	52.386	55.518	0.16	0.17	2.22	81	0.45	1.79	79	-3.4	85	0.090	98	99	1.3	0.00	353	273	283	141	231	256	697	198	83	64	85	65	76	-0.019	6.15	0.24
320	52.551	55.692	0.16	0.17	2.23	81	0.16	1.80	79	-3.5	85	0.090	99	99	1.3	0.00	353	273	283	142	231	256	702	198	83	64	85	65	76	-0.018	6.21	0.3
321	52.715	55.867	0.16	0.17	2.22	81	-0.02	1.79	79	-3.5	85	0.090	99	99	1.3	0.00	353	273	282	142	230	256	698	198	83	64	85	65	76	-0.018	6.08	0.29
322	52.878	56.042	0.16	0.18	2.22	81	0.18	1.79	79	-3.3	85	0.090	98	99	1.3	-0.04	353	273	281	142	230	256	687	197	83	64	85	65	76	-0.018	5.97	0.27
323	53.042	56.216	0.16	0.17	2.24	81	0.44	1.80	79	-3.5	85	0.090	99	99	1.3	0.00	353	273	281	141	229	255	678	197	83	64	85	65	75	-0.018	5.97	0.24

Wood Heater Test Data

7

Run: 4

Manufacturer: Hearth & Home
Model: Dauntless-CAT
Tracking No.: 2389
Project No.: 061WS104E
Test Date: 03-Oct-19
Beginning Clock Time: 13;04

Total Sampling Time: 449 min
Recording Interval: 1 min
Background Sample Volume: _____ cubic feet

Meter Box Y Factor: 0.992 (1) 0.989 (2) _____ (Amb)

Barometric Pressure:	Begin	Middle	End	Average
	29.52		29.46	29.49 0

OMNI Equipment Numbers: _____

PM Control Modules: 371, 372
Dilution Tunnel MW(dry): 29.00 lb/lb-mole
Dilution Tunnel MW(wet): 28.78 lb/lb-mole
Dilution Tunnel H2O: 2.00 percent
Dilution Tunnel Static: -0.280 "H2O
Tunnel Area: 0.19635 ft2
Pitot Tube Cp: 0.99

Avg. Tunnel Velocity: 19.48 ft/sec.
Initial Tunnel Flow: 209.0 scfm
Average Tunnel Flow: 212.8 scfm
Post-Test Leak Check (1): 0.000 cfm @ 6 in. Hg
Post-Test Leak Check (2): 0.000 cfm @ 8 in. Hg
Average Test Piece Fuel Moisture: 22.67 Dry Basis %

Technician Signature: _____

Velocity Traverse Data

	Pt.1	Pt.2	Pt.3	Pt.4	Pt.5	Pt.6	Pt.7	Pt.8	Center	
Initial dP	0.074	0.084	0.078	0.072	0.074	0.082	0.082	0.080	0.086	"H2O
Temp:	85	85	85	85	85	85	85	85	85	°F

V_{strav} 19.06 ft/sec V_{scent} 19.89 ft/sec F_p 0.959

Elapsed Time (min)	Particulate Sampling Data: Gas Meter 1 (ft^3)	Gas Meter 2 (ft^3)	Sample Rate 1 (cfm)	Sample Rate 2 (cfm)	Orifice dH 1 ("H_2O)	Meter 1 Temp (°F)	Meter 1 Vacuum ("Hg)	Orifice dH 2 ("H_2O)	Meter 2 Temp (°F)	Meter 2 Vacuum ("Hg)	Dilution Tunnel (°F)	Dilution Tunnel Center dP	Pro. Rate 1	Pro. Rate 2	Fuel Weight (lb): Scale Reading	Weight Change	Temperature Data (°F): Firebox Top	Firebox Bottom	Firebox Back	Firebox Left	Firebox Right	Avg. Stove Surface	Catalyst Exit	Stack	Filter 1	Dryer Exit 1	Filter 2	Dryer Exit 2	Ambient	Stack Gas Data: Draft ("H_2O)	CO_2 (%)	CO (%)
324	53.207	56.391	0.16	0.17	2.23	81	-0.09	1.80	79	-3.4	85	0.090	99	99	1.3	0.00	352	273	280	141	229	255	673	197	83	64	85	65	76	-0.018	5.87	0.22
325	53.371	56.566	0.16	0.18	2.22	81	0.02	1.79	79	-3.3	85	0.090	99	99	1.3	0.00	351	273	280	141	229	255	669	196	83	64	85	65	76	-0.018	5.82	0.22
326	53.535	56.740	0.16	0.17	2.23	81	0.38	1.79	79	-3.5	85	0.080	105	105	1.2	-0.07	351	273	279	141	229	255	665	195	83	64	85	65	76	-0.018	5.8	0.21
327	53.698	56.915	0.16	0.17	2.23	80	0.12	1.79	79	-3.5	85	0.090	98	99	1.2	0.00	350	273	278	141	228	254	661	195	83	64	85	65	75	-0.018	5.78	0.21
328	53.863	57.090	0.16	0.18	2.23	80	0.06	1.78	79	-3.4	84	0.090	99	99	1.2	0.00	350	273	278	140	228	254	659	195	83	64	84	65	74	-0.018	5.76	0.21
329	54.027	57.264	0.16	0.17	2.22	80	0.43	1.80	79	-3.5	84	0.090	99	99	1.2	0.00	349	273	277	140	227	253	655	195	83	64	84	65	74	-0.018	5.76	0.2
330	54.191	57.440	0.16	0.18	2.23	81	0.45	1.80	79	-3.3	85	0.090	99	100	1.1	-0.04	348	273	276	139	227	253	652	195	83	64	84	65	75	-0.017	5.74	0.2
331	54.356	57.614	0.16	0.17	2.20	81	0.35	1.78	79	-3.5	84	0.090	99	99	1.1	0.00	347	272	275	139	226	252	649	194	83	64	84	65	75	-0.017	5.73	0.2
332	54.519	57.789	0.16	0.18	2.20	80	0.07	1.80	79	-3.3	85	0.090	98	99	1.1	0.00	347	271	274	138	226	251	646	193	82	64	84	65	75	-0.018	5.7	0.19
333	54.683	57.964	0.16	0.17	2.22	81	-0.01	1.80	79	-3.5	84	0.090	99	99	1.1	-0.04	346	272	274	138	226	251	641	193	83	64	84	65	75	-0.017	5.68	0.19
334	54.847	58.138	0.16	0.17	2.23	81	0.29	1.79	79	-3.5	84	0.090	99	99	1.1	0.00	345	272	273	138	225	251	638	192	83	64	84	65	75	-0.017	5.66	0.18
335	55.011	58.314	0.16	0.18	2.22	80	0.17	1.79	79	-3.4	84	0.090	99	100	1.1	0.00	345	272	272	138	225	250	635	191	83	64	84	65	76	-0.017	5.64	0.18
336	55.175	58.488	0.16	0.17	2.22	80	0.45	1.80	79	-3.3	84	0.090	99	99	1.1	0.00	345	271	271	138	225	250	632	191	83	64	84	65	76	-0.017	5.61	0.18
337	55.339	58.663	0.16	0.17	2.23	80	-0.1	1.80	79	-3.3	84	0.090	99	99	1.1	0.00	344	271	271	138	225	250	629	190	83	64	85	65	76	-0.017	5.62	0.18
338	55.503	58.838	0.16	0.18	2.23	80	-0.07	1.79	79	-3.5	84	0.090	99	99	1.1	0.00	344	270	270	138	224	249	628	189	83	64	85	65	75	-0.017	5.61	0.18
339	55.667	59.012	0.16	0.17	2.21	80	0.19	1.80	79	-3.4	84	0.090	99	99	1.1	0.00	343	270	269	137	224	249	626	189	83	64	85	65	75	-0.017	5.61	0.18
340	55.831	59.187	0.16	0.17	2.22	80	0.16	1.79	79	-3.4	84	0.090	99	99	1.1	-0.04	343	270	269	137	224	249	623	189	83	64	85	65	74	-0.017	5.62	0.18
341	55.995	59.362	0.16	0.18	2.21	80	-0.1	1.79	79	-3.3	84	0.090	99	99	1.1	0.00	343	270	268	137	223	248	621	189	83	64	85	65	74	-0.016	5.64	0.18
342	56.159	59.536	0.16	0.17	2.20	80	0.38	1.80	79	-3.5	84	0.090	99	99	1.1	0.00	342	269	267	136	223	247	619	188	83	64	85	65	74	-0.016	5.63	0.18
343	56.323	59.711	0.16	0.17	2.22	80	0.15	1.79	79	-3.3	84	0.090	99	99	1.0	-0.07	342	269	267	136	223	247	617	188	83	64	85	66	74	-0.016	5.6	0.17
344	56.487	59.886	0.16	0.18	2.23	80	0.06	1.79	79	-3.3	84	0.090	99	99	1.0	0.00	341	269	266	135	222	247	615	187	83	64	85	66	75	-0.016	5.6	0.17
345	56.651	60.061	0.16	0.17	2.22	80	-0.07	1.81	79	-3.3	84	0.090	99	99	1.0	0.00	341	268	265	135	222	246	613	186	83	64	85	66	75	-0.016	5.57	0.17
346	56.815	60.236	0.16	0.17	2.22	80	0.39	1.79	79	-3.3	84	0.090	99	99	1.0	0.00	341	268	265	135	221	246	609	186	83	64	84	66	74	-0.016	5.57	0.17
347	56.979	60.410	0.16	0.17	2.23	80	-0.01	1.79	79	-3.5	83	0.090	99	99	1.0	0.00	340	268	264	135	221	246	606	186	82	64	84	66	75	-0.016	5.55	0.17
348	57.144	60.585	0.16	0.18	2.23	80	0.44	1.79	79	-3.3	83	0.090	99	99	1.0	0.00	340	268	263	135	221	245	603	185	82	64	84	66	75	-0.016	5.54	0.17
349	57.307	60.760	0.16	0.17	2.21	80	0.14	1.80	79	-3.3	83	0.090	98	99	0.9	-0.04	340	267	263	134	220	245	599	185	82	64	84	66	74	-0.016	5.56	0.17
350	57.471	60.935	0.16	0.18	2.22	80	0.29	1.79	79	-3.5	83	0.090	99	99	0.9	0.00	340	267	262	134	220	245	597	185	83	64	84	66	75	-0.015	5.58	0.17
351	57.636	61.110	0.17	0.17	2.21	80	-0.08	1.79	79	-3.5	83	0.090	99	99	0.9	0.00	340	267	262	133	220	244	594	184	83	64	83	66	74	-0.015	5.56	0.17
352	57.799	61.284	0.16	0.17	2.20	80	-0.03	1.80	79	-3.3	83	0.090	98	99	0.9	0.00	339	266	261	133	220	244	591	184	83	64	84	66	75	-0.015	5.55	0.16
353	57.963	61.459	0.16	0.18	2.22	80	0.45	1.79	79	-3.5	83	0.090	99	99	0.9	0.00	339	266	261	133	219	244	589	183	83	64	84	66	74	-0.015	5.53	0.16
354	58.127	61.633	0.16	0.17	2.23	80	-0.04	1.79	79	-3.5	83	0.090	99	99	0.9	0.00	339	266	260	133	219	243	587	183	83	65	84	66	74	-0.015	5.52	0.16
355	58.292	61.808	0.16	0.17	2.22	80	0.16	1.80	79	-3.5	83	0.090	99	99	0.9	-0.04	339	265	260	132	219	243	586	183	83	64	84	66	74	-0.015	5.52	0.16
356	58.455	61.983	0.16	0.17	2.21	80	0.06	1.79	79	-3.4	83	0.090	98	99	0.9	0.00	338	265	259	132	219	243	584	182	83	65	84	66	74	-0.015	5.52	0.16
357	58.619	62.158	0.16	0.18	2.23	80	-0.01	1.78	79	-3.4	83	0.090	99	99	0.9	0.00	338	265	259	132	218	242	582	182	83	65	85	66	75	-0.015	5.5	0.16
358	58.783	62.332	0.16	0.17	2.23	80	-0.1	1.80	79	-3.2	83	0.090	99	99	0.9	0.00	337	264	258	131	218	242	579	181	83	65	85	66	74	-0.015	5.51	0.16
359	58.947	62.507	0.16	0.17	2.21	80	0.45	1.79	79	-3.5	83	0.090	99	99	0.9	-0.04	337	263	257	131	217	241	576	181	83	65	85	66	74	-0.015	5.53	0.16

Wood Heater Test Data

7

Run: 4

Manufacturer: Hearth & Home
Model: Dauntless-CAT
Tracking No.: 2389
Project No.: 061WS104E
Test Date: 03-Oct-19
Beginning Clock Time: 13;04

Total Sampling Time: 449 min
Recording Interval: 1 min
Background Sample Volume: _____ cubic feet

Meter Box Y Factor: 0.992 (1) 0.989 (2) _____ (Amb)

Barometric Pressure:	Begin	Middle	End	Average
	29.52		29.46	29.49 0

OMNI Equipment Numbers: _____

PM Control Modules: 371, 372
Dilution Tunnel MW(dry): 29.00 lb/lb-mole
Dilution Tunnel MW(wet): 28.78 lb/lb-mole
Dilution Tunnel H2O: 2.00 percent
Dilution Tunnel Static: -0.280 "H2O
Tunnel Area: 0.19635 ft2
Pitot Tube Cp: 0.99

Avg. Tunnel Velocity: 19.48 ft/sec.
Initial Tunnel Flow: 209.0 scfm
Average Tunnel Flow: 212.8 scfm
Post-Test Leak Check (1): 0.000 cfm @ 6 in. Hg
Post-Test Leak Check (2): 0.000 cfm @ 8 in. Hg
Average Test Piece Fuel Moisture: 22.67 Dry Basis %

Technician Signature: _____

Velocity Traverse Data

	Pt.1	Pt.2	Pt.3	Pt.4	Pt.5	Pt.6	Pt.7	Pt.8	Center	
Initial dP	0.074	0.084	0.078	0.072	0.074	0.082	0.082	0.080	0.086	"H2O
Temp:	85	85	85	85	85	85	85	85	85	°F

V_{strav} 19.06 ft/sec V_{scent} 19.89 ft/sec F_p 0.959

	Particulate Sampling Data														Fuel Weight (lb)		Temperature Data (°F)													Stack Gas Data		
Elapsed Time (min)	Gas Meter 1 (ft^3)	Gas Meter 2 (ft^3)	Sample Rate 1 (cfm)	Sample Rate 2 (cfm)	Orifice dH 1 ("H_2O)	Meter 1 Temp (°F)	Meter 1 Vacuum ("Hg)	Orifice dH 2 ("H_2O)	Meter 2 Temp (°F)	Meter 2 Vacuum ("Hg)	Dilution Tunnel (°F)	Dilution Tunnel Center dP	Pro. Rate 1	Pro. Rate 2	Scale Reading	Weight Change	Firebox Top	Firebox Bottom	Firebox Back	Firebox Left	Firebox Right	Avg. Stove Surface	Catalyst Exit	Stack	Filter 1	Dryer Exit 1	Filter 2	Dryer Exit 2	Ambient	Draft ("H_2O)	CO_2 (%)	CO (%)
360	59.111	62.682	0.16	0.18	2.23	80	-0.1	1.79	79	-3.5	83	0.090	99	99	0.9	0.00	336	263	257	131	217	241	574	181	83	65	85	66	74	-0.015	5.52	0.16
361	59.275	62.857	0.16	0.17	2.20	80	0.42	1.78	79	-3.5	83	0.090	99	99	0.9	0.00	335	263	256	131	217	240	572	180	83	65	85	66	75	-0.014	5.53	0.16
362	59.439	63.032	0.16	0.17	2.20	80	0.43	1.80	79	-3.2	83	0.090	99	99	0.9	0.00	335	263	256	130	216	240	569	180	83	65	85	66	75	-0.014	5.51	0.16
363	59.602	63.206	0.16	0.17	2.22	80	0.08	1.79	79	-3.4	83	0.090	98	99	0.9	0.00	335	263	255	130	216	240	566	180	82	65	85	66	75	-0.014	5.5	0.16
364	59.766	63.381	0.16	0.17	2.23	80	-0.04	1.78	79	-3.3	83	0.090	99	99	0.8	-0.07	335	262	255	130	216	240	564	179	82	65	85	66	75	-0.014	5.49	0.16
365	59.931	63.556	0.16	0.17	2.21	80	0.39	1.80	79	-3.5	83	0.090	99	99	0.8	0.00	334	262	254	130	215	239	562	179	83	65	85	66	75	-0.014	5.47	0.16
366	60.094	63.730	0.16	0.17	2.22	80	0.05	1.79	79	-3.5	83	0.090	98	99	0.8	0.00	334	261	254	129	215	239	562	178	83	65	84	66	74	-0.014	5.48	0.16
367	60.258	63.906	0.16	0.18	2.21	80	-0.1	1.79	79	-3.5	83	0.090	99	100	0.8	0.00	333	261	253	129	215	238	562	179	83	65	84	66	74	-0.014	5.55	0.16
368	60.423	64.080	0.16	0.17	2.22	80	0.45	1.80	79	-3.3	83	0.090	99	99	0.8	0.00	333	262	253	129	215	238	561	178	83	65	84	66	74	-0.014	5.55	0.16
369	60.586	64.255	0.16	0.17	2.21	80	-0.09	1.80	79	-3.4	83	0.090	98	99	0.8	0.00	333	261	253	129	214	238	561	178	83	65	84	66	74	-0.014	5.54	0.16
370	60.749	64.430	0.16	0.18	2.22	80	0.28	1.79	79	-3.4	83	0.090	98	99	0.8	0.00	332	261	252	129	214	238	559	178	83	65	83	66	74	-0.014	5.55	0.16
371	60.914	64.605	0.16	0.17	2.21	80	-0.01	1.80	79	-3.5	83	0.090	99	99	0.7	-0.04	333	260	251	128	214	237	558	178	83	65	83	66	74	-0.014	5.53	0.15
372	61.077	64.780	0.16	0.17	2.20	80	0.45	1.80	79	-3.5	83	0.090	98	99	0.7	0.00	332	260	251	128	213	237	561	177	83	65	84	66	74	-0.014	5.53	0.15
373	61.241	64.955	0.16	0.17	2.22	80	0.22	1.78	79	-3.5	83	0.090	99	99	0.7	0.00	332	259	250	128	213	236	572	177	83	65	84	66	74	-0.014	5.53	0.16
374	61.405	65.129	0.16	0.17	2.22	80	-0.02	1.80	79	-3.3	83	0.090	99	99	0.7	-0.04	331	259	250	128	212	236	578	177	83	65	84	66	75	-0.014	5.5	0.17
375	61.569	65.305	0.16	0.18	2.19	80	0.44	1.80	79	-3.3	83	0.090	99	100	0.7	0.00	331	258	250	128	212	236	581	177	83	65	84	66	74	-0.014	5.5	0.17
376	61.732	65.479	0.16	0.17	2.21	80	-0.01	1.78	79	-3.5	83	0.090	98	99	0.7	0.00	330	258	249	128	212	235	584	177	83	65	85	66	74	-0.014	5.51	0.17
377	61.896	65.654	0.16	0.17	2.23	80	-0.08	1.81	79	-3.5	83	0.090	99	99	0.7	0.00	330	258	249	127	212	235	585	177	83	65	85	66	75	-0.014	5.51	0.16
378	62.061	65.829	0.16	0.17	2.21	80	0.45	1.80	79	-3.5	83	0.090	99	99	0.7	0.00	330	257	248	127	212	235	585	177	82	65	85	66	74	-0.014	5.52	0.16
379	62.224	66.004	0.16	0.18	2.22	80	-0.01	1.80	79	-3.5	82	0.090	98	99	0.7	0.00	329	257	248	127	211	234	585	177	82	65	85	66	74	-0.014	5.51	0.16
380	62.388	66.179	0.16	0.17	2.22	80	0.44	1.79	79	-3.3	82	0.090	99	99	0.7	-0.04	329	257	247	127	211	234	585	177	82	65	85	66	74	-0.013	5.52	0.16
381	62.553	66.354	0.16	0.17	2.22	80	0.14	1.79	79	-3.3	82	0.090	99	99	0.7	0.00	328	257	247	127	211	234	586	177	83	65	85	66	74	-0.013	5.51	0.16
382	62.716	66.528	0.16	0.17	2.21	80	-0.01	1.79	79	-3.3	82	0.090	98	98	0.7	0.00	329	256	247	126	211	234	585	177	83	65	85	67	74	-0.013	5.54	0.16
383	62.880	66.704	0.16	0.18	2.22	80	-0.01	1.79	79	-3.3	82	0.090	99	100	0.7	0.00	327	256	246	127	210	233	585	176	83	65	85	67	74	-0.013	5.54	0.16
384	63.044	66.878	0.16	0.17	2.22	80	-0.09	1.80	79	-3.3	83	0.090	99	99	0.7	0.00	327	255	246	126	210	233	584	177	83	65	85	67	74	-0.014	5.54	0.16
385	63.208	67.053	0.16	0.17	2.20	80	0.01	1.79	79	-3.5	82	0.090	99	99	0.7	0.00	327	255	245	126	210	233	583	176	83	65	84	67	74	-0.014	5.5	0.15
386	63.371	67.228	0.16	0.17	2.21	80	-0.07	1.79	79	-3.4	82	0.090	98	99	0.6	-0.07	326	254	245	126	209	232	582	176	83	65	84	67	74	-0.013	5.5	0.15
387	63.535	67.402	0.16	0.17	2.22	80	0.44	1.80	79	-3.4	82	0.090	99	98	0.6	0.00	326	254	244	126	209	232	580	176	83	65	84	67	75	-0.014	5.46	0.15
388	63.699	67.578	0.16	0.18	2.27	80	0.1	1.79	79	-3.3	82	0.090	99	100	0.6	0.00	326	254	244	126	209	232	578	176	83	65	84	67	75	-0.013	5.47	0.15
389	63.865	67.752	0.17	0.17	2.27	80	0.04	1.79	79	-3.4	83	0.090	100	99	0.6	0.00	325	253	243	126	209	231	577	175	83	65	83	67	75	-0.013	5.46	0.15
390	64.031	67.927	0.17	0.18	2.27	80	0.29	1.80	79	-3.5	82	0.090	100	99	0.5	-0.04	324	253	243	126	209	231	575	175	83	65	83	67	75	-0.013	5.46	0.15
391	64.196	68.102	0.16	0.17	2.28	80	0.4	1.79	79	-3.3	82	0.090	99	99	0.5	0.00	324	253	243	126	208	231	573	175	83	65	83	67	75	-0.013	5.46	0.15
392	64.363	68.277	0.17	0.17	2.28	80	-0.08	1.79	79	-3.3	82	0.090	100	99	0.5	0.00	324	252	242	126	208	230	572	174	83	66	84	67	75	-0.013	5.43	0.15
393	64.529	68.452	0.17	0.17	2.25	80	0.12	1.79	79	-3.5	82	0.090	100	99	0.5	0.00	323	252	242	126	208	230	570	174	82	65	84	67	74	-0.013	5.41	0.15
394	64.694	68.627	0.17	0.17	2.27	80	0.31	1.80	79	-3.5	82	0.080	105	105	0.5	0.00	323	252	242	126	208	230	568	174	82	66	84	67	73	-0.013	5.4	0.15
395	64.860	68.802	0.17	0.18	2.27	80	0.06	1.78	79	-3.5	82	0.090	100	99	0.5	0.00	323	251	241	126	208	230	567	174	82	66	84	67	74	-0.013	5.36	0.14

Wood Heater Test Data

7

Run: 4

Manufacturer: Hearth & Home
Model: Dauntless-CAT
Tracking No.: 2389
Project No.: 061WS104E
Test Date: 03-Oct-19
Beginning Clock Time: 13;04

Total Sampling Time: 449 min
Recording Interval: 1 min
Background Sample Volume: _____ cubic feet

Meter Box Y Factor: 0.992 (1) 0.989 (2) _____ (Amb)

Barometric Pressure:	Begin	Middle	End	Average
	29.52		29.46	29.49 0

OMNI Equipment Numbers: _____

PM Control Modules: 371, 372
Dilution Tunnel MW(dry): 29.00 lb/lb-mole
Dilution Tunnel MW(wet): 28.78 lb/lb-mole
Dilution Tunnel H2O: 2.00 percent
Dilution Tunnel Static: -0.280 "H2O
Tunnel Area: 0.19635 ft2
Pitot Tube Cp: 0.99

Avg. Tunnel Velocity: 19.48 ft/sec.
Initial Tunnel Flow: 209.0 scfm
Average Tunnel Flow: 212.8 scfm
Post-Test Leak Check (1): 0.000 cfm @ 6 in. Hg
Post-Test Leak Check (2): 0.000 cfm @ 8 in. Hg
Average Test Piece Fuel Moisture: 22.67 Dry Basis %

Technician Signature: _____

Velocity Traverse Data

	Pt.1	Pt.2	Pt.3	Pt.4	Pt.5	Pt.6	Pt.7	Pt.8	Center	
Initial dP	0.074	0.084	0.078	0.072	0.074	0.082	0.082	0.080	0.086	"H2O
Temp:	85	85	85	85	85	85	85	85	85	°F

V_{strav} 19.06 ft/sec V_{scent} 19.89 ft/sec F_p 0.959

Elapsed Time (min)	Particulate Sampling Data: Gas Meter 1 (ft^3)	Gas Meter 2 (ft^3)	Sample Rate 1 (cfm)	Sample Rate 2 (cfm)	Orifice dH 1 ("H_2O)	Meter 1 Temp (°F)	Meter 1 Vacuum ("Hg)	Orifice dH 2 ("H_2O)	Meter 2 Temp (°F)	Meter 2 Vacuum ("Hg)	Dilution Tunnel (°F)	Dilution Tunnel Center dP	Pro. Rate 1	Pro. Rate 2	Fuel Weight (lb): Scale Reading	Weight Change	Temperature Data (°F): Firebox Top	Firebox Bottom	Firebox Back	Firebox Left	Firebox Right	Avg. Stove Surface	Catalyst Exit	Stack	Filter 1	Dryer Exit 1	Filter 2	Dryer Exit 2	Ambient	Stack Gas Data: Draft ("H_2O)	CO_2 (%)	CO (%)
396	65.026	68.977	0.17	0.17	2.27	80	0.21	1.80	79	-3.4	82	0.090	100	99	0.5	-0.04	322	251	241	125	207	229	567	174	83	66	85	67	74	-0.013	5.37	0.15
397	65.192	69.152	0.17	0.17	2.27	80	-0.06	1.80	79	-3.5	82	0.090	100	99	0.5	0.00	322	250	240	125	207	229	566	173	83	66	85	67	75	-0.013	5.37	0.15
398	65.358	69.326	0.17	0.17	2.26	80	0.31	1.80	79	-3.3	82	0.090	100	98	0.5	0.00	321	250	240	125	206	228	566	174	83	66	85	67	74	-0.013	5.35	0.15
399	65.523	69.502	0.16	0.18	2.27	80	0.11	1.79	79	-3.3	82	0.090	99	100	0.5	0.00	321	250	239	125	206	228	565	173	83	66	85	67	74	-0.013	5.34	0.15
400	65.689	69.676	0.17	0.17	2.28	80	-0.1	1.80	79	-3.4	82	0.090	100	98	0.5	0.00	321	249	239	125	206	228	567	173	83	66	85	67	74	-0.013	5.31	0.15
401	65.856	69.851	0.17	0.17	2.26	80	-0.09	1.80	79	-3.4	82	0.090	100	99	0.5	0.00	320	249	239	125	206	228	568	173	83	66	85	67	74	-0.013	5.36	0.16
402	66.021	70.026	0.17	0.17	2.26	80	0.21	1.79	79	-3.5	82	0.090	99	99	0.4	-0.07	321	249	238	125	206	228	567	173	83	66	85	67	75	-0.013	5.33	0.16
403	66.187	70.201	0.17	0.17	2.27	80	0.41	1.80	79	-3.3	82	0.090	100	99	0.4	0.00	321	248	238	125	205	227	565	172	83	66	84	67	75	-0.013	5.31	0.16
404	66.352	70.376	0.17	0.18	2.27	80	0.29	1.79	79	-3.4	82	0.090	99	99	0.4	0.00	320	248	237	125	205	227	564	173	83	66	84	67	75	-0.013	5.31	0.16
405	66.518	70.551	0.17	0.17	2.29	80	-0.09	1.79	79	-3.3	82	0.090	100	99	0.4	0.00	320	247	237	125	205	227	562	172	83	66	84	67	74	-0.013	5.27	0.16
406	66.684	70.726	0.17	0.17	2.25	80	0.33	1.80	79	-3.5	82	0.090	100	99	0.4	0.00	319	247	236	124	205	226	561	172	83	66	84	67	74	-0.013	5.27	0.15
407	66.850	70.901	0.17	0.17	2.27	80	-0.01	1.79	79	-3.5	82	0.090	100	99	0.4	0.00	319	247	236	124	205	226	559	172	83	66	83	67	73	-0.013	5.26	0.15
408	67.016	71.076	0.17	0.17	2.27	80	-0.02	1.79	79	-3.3	82	0.090	100	99	0.4	-0.04	320	247	236	124	204	226	558	172	82	66	83	67	73	-0.013	5.24	0.15
409	67.182	71.250	0.17	0.17	2.28	80	0.34	1.80	79	-3.5	82	0.090	100	98	0.4	0.00	318	246	235	124	204	225	555	172	82	66	83	67	74	-0.013	5.25	0.15
410	67.348	71.426	0.17	0.18	2.27	80	0.4	1.79	79	-3.4	82	0.090	100	100	0.4	0.00	319	246	235	123	203	225	553	172	82	66	83	67	74	-0.013	5.24	0.15
411	67.513	71.600	0.17	0.17	2.25	80	0.31	1.79	79	-3.5	82	0.090	99	98	0.4	0.00	318	245	235	123	203	225	551	172	82	66	84	67	74	-0.012	5.23	0.15
412	67.679	71.775	0.17	0.18	2.27	80	-0.12	1.80	79	-3.3	82	0.090	100	99	0.4	0.00	317	245	234	123	203	224	548	171	83	66	84	67	74	-0.012	5.23	0.15
413	67.845	71.950	0.17	0.17	2.28	80	0.2	1.80	79	-3.5	82	0.090	100	99	0.4	0.00	317	244	234	123	203	224	545	171	83	66	84	67	74	-0.012	5.19	0.15
414	68.011	72.125	0.17	0.17	2.27	80	-0.02	1.78	79	-3.3	82	0.090	100	99	0.4	-0.04	316	244	233	123	202	224	543	170	83	66	84	67	74	-0.012	5.18	0.15
415	68.177	72.300	0.17	0.17	2.27	80	0.2	1.80	79	-3.5	82	0.090	100	99	0.4	0.00	316	243	233	123	202	223	539	170	83	66	85	67	75	-0.012	5.15	0.14
416	68.342	72.475	0.16	0.17	2.26	80	0.23	1.80	79	-3.4	82	0.090	99	99	0.4	0.00	316	243	233	123	202	223	537	170	83	66	85	67	75	-0.012	5.14	0.14
417	68.508	72.650	0.17	0.18	2.27	80	0.39	1.79	79	-3.3	82	0.090	100	99	0.4	0.00	315	243	232	123	202	223	534	169	83	66	85	67	74	-0.012	5.13	0.14
418	68.673	72.825	0.17	0.17	2.28	80	-0.1	1.79	79	-3.2	82	0.090	99	99	0.4	0.00	315	242	232	123	201	223	533	168	83	66	85	67	74	-0.012	5.11	0.14
419	68.840	72.999	0.17	0.17	2.26	80	0.12	1.79	79	-3.4	82	0.090	100	98	0.3	-0.04	315	242	232	122	201	222	531	168	83	66	85	67	74	-0.012	5.09	0.14
420	69.005	73.174	0.16	0.18	2.26	80	0.15	1.79	79	-3.4	82	0.090	99	99	0.3	0.00	314	242	232	122	201	222	530	168	83	66	85	68	73	-0.012	5.08	0.14
421	69.171	73.349	0.17	0.17	2.26	80	0	1.79	79	-3.3	81	0.090	100	99	0.3	0.00	314	241	231	122	200	222	527	168	83	66	85	68	74	-0.012	5.01	0.14
422	69.336	73.524	0.16	0.17	2.27	80	0.26	1.79	79	-3.5	82	0.090	99	99	0.3	0.00	314	241	231	122	200	222	525	167	83	66	84	68	74	-0.012	4.94	0.14
423	69.502	73.699	0.17	0.17	2.27	80	0.19	1.79	79	-3.5	81	0.090	100	99	0.3	0.00	313	241	231	121	200	221	522	167	82	66	84	68	74	-0.012	4.9	0.14
424	69.668	73.873	0.17	0.17	2.24	80	-0.01	1.79	79	-3.3	81	0.090	100	98	0.3	0.00	312	239	230	121	199	220	519	166	82	66	84	68	74	-0.011	4.87	0.14
425	69.833	74.048	0.16	0.17	2.27	80	0.41	1.81	79	-3.5	81	0.090	99	99	0.2	-0.07	312	239	230	121	200	220	517	166	82	66	84	68	74	-0.012	4.85	0.14
426	69.999	74.223	0.17	0.17	2.27	80	-0.08	1.79	79	-3.5	81	0.090	100	99	0.2	0.00	311	239	229	121	199	220	515	166	82	66	83	68	74	-0.011	4.83	0.14
427	70.164	74.398	0.17	0.17	2.25	80	0.08	1.79	79	-3.3	81	0.090	99	99	0.2	0.00	310	239	229	121	199	220	512	165	83	66	83	68	74	-0.011	4.81	0.13
428	70.330	74.573	0.17	0.17	2.26	80	0.37	1.80	79	-3.3	81	0.090	100	99	0.2	0.00	310	239	229	121	198	219	509	165	83	66	83	68	75	-0.011	4.78	0.13
429	70.495	74.748	0.17	0.18	2.26	80	0.43	1.79	79	-3.4	81	0.090	99	99	0.2	0.00	309	238	228	121	198	219	505	165	83	66	83	68	74	-0.011	4.78	0.13
430	70.661	74.923	0.17	0.17	2.26	80	0.41	1.79	79	-3.4	81	0.090	100	99	0.2	0.00	309	238	228	121	198	219	503	164	83	66	84	68	74	-0.011	4.72	0.14
431	70.827	75.098	0.17	0.17	2.27	80	0.23	1.79	79	-3.3	81	0.090	100	99	0.2	0.00	308	237	227	121	198	218	499	164	83	66	84	68	75	-0.011	4.71	0.14

Wood Heater Test Data

7

Run: 4

Manufacturer: Hearth & Home
Model: Dauntless-CAT
Tracking No.: 2389
Project No.: 061WS104E
Test Date: 03-Oct-19
Beginning Clock Time: 13;04

Total Sampling Time: 449 min
Recording Interval: 1 min
Background Sample Volume: _____ cubic feet

Meter Box Y Factor: 0.992 (1) 0.989 (2) _____ (Amb)

Barometric Pressure:	Begin	Middle	End	Average
	29.52		29.46	29.49 0

OMNI Equipment Numbers: _____

PM Control Modules: 371, 372
Dilution Tunnel MW(dry): 29.00 lb/lb-mole
Dilution Tunnel MW(wet): 28.78 lb/lb-mole
Dilution Tunnel H2O: 2.00 percent
Dilution Tunnel Static: -0.280 "H2O
Tunnel Area: 0.19635 ft2
Pitot Tube Cp: 0.99

Avg. Tunnel Velocity: 19.48 ft/sec.
Initial Tunnel Flow: 209.0 scfm
Average Tunnel Flow: 212.8 scfm
Post-Test Leak Check (1): 0.000 cfm @ 6 in. Hg
Post-Test Leak Check (2): 0.000 cfm @ 8 in. Hg
Average Test Piece Fuel Moisture: 22.67 Dry Basis %

Technician Signature: _____

Velocity Traverse Data

	Pt.1	Pt.2	Pt.3	Pt.4	Pt.5	Pt.6	Pt.7	Pt.8	Center	
Initial dP	0.074	0.084	0.078	0.072	0.074	0.082	0.082	0.080	0.086	"H2O
Temp:	85	85	85	85	85	85	85	85	85	°F

V_{strav} 19.06 ft/sec V_{scent} 19.89 ft/sec F_p 0.959

	Particulate Sampling Data														Fuel Weight (lb)		Temperature Data (°F)													Stack Gas Data		
Elapsed Time (min)	Gas Meter 1 (ft^3)	Gas Meter 2 (ft^3)	Sample Rate 1 (cfm)	Sample Rate 2 (cfm)	Orifice dH 1 ("H_2O)	Meter 1 Temp (°F)	Meter 1 Vacuum ("Hg)	Orifice dH 2 ("H_2O)	Meter 2 Temp (°F)	Meter 2 Vacuum ("Hg)	Dilution Tunnel (°F)	Dilution Tunnel Center dP	Pro. Rate 1	Pro. Rate 2	Scale Reading	Weight Change	Firebox Top	Firebox Bottom	Firebox Back	Firebox Left	Firebox Right	Avg. Stove Surface	Catalyst Exit	Stack	Filter 1	Dryer Exit 1	Filter 2	Dryer Exit 2	Ambient	Draft ("H_2O)	CO_2 (%)	CO (%)
432	70.993	75.273	0.17	0.17	2.27	80	0.42	1.80	79	-3.4	81	0.090	100	99	0.2	-0.04	308	237	227	120	198	218	497	163	83	66	84	68	74	-0.011	4.68	0.13
433	71.159	75.448	0.17	0.17	2.25	80	0.42	1.79	79	-3.5	81	0.090	100	99	0.2	0.00	307	236	227	120	197	217	494	163	83	66	84	68	73	-0.011	4.65	0.13
434	71.324	75.623	0.16	0.18	2.27	80	0.03	1.79	79	-3.4	81	0.090	99	99	0.2	0.00	307	236	227	120	197	217	492	162	83	66	85	68	74	-0.010	4.62	0.13
435	71.490	75.798	0.17	0.17	2.27	80	0.17	1.80	78	-3.4	81	0.090	100	99	0.2	0.00	306	236	226	119	197	217	489	162	83	66	85	68	74	-0.010	4.58	0.13
436	71.656	75.972	0.17	0.17	2.26	80	-0.01	1.80	79	-3.3	81	0.090	100	98	0.2	0.00	305	235	226	119	196	216	486	162	83	66	85	68	74	-0.011	4.55	0.13
437	71.821	76.147	0.16	0.18	2.26	80	0.24	1.79	79	-3.2	81	0.090	99	99	0.2	0.00	305	235	225	119	196	216	484	162	83	66	85	68	74	-0.011	4.54	0.13
438	71.987	76.322	0.17	0.17	2.26	80	0.09	1.80	79	-3.5	81	0.090	100	99	0.2	0.00	304	234	225	119	196	216	481	161	82	66	85	68	74	-0.010	4.5	0.13
439	72.152	76.496	0.17	0.17	2.27	80	0.32	1.80	79	-3.3	81	0.090	99	98	0.2	0.00	302	234	225	118	196	215	479	161	82	66	85	68	74	-0.010	4.48	0.13
440	72.318	76.671	0.17	0.18	2.28	80	-0.01	1.79	79	-3.5	81	0.090	100	99	0.2	-0.04	302	234	224	118	195	215	477	161	82	67	85	68	74	-0.010	4.48	0.13
441	72.484	76.846	0.17	0.17	2.26	80	-0.12	1.80	79	-3.3	81	0.090	100	99	0.2	0.00	301	233	224	118	195	214	475	160	82	67	84	68	74	-0.010	4.45	0.13
442	72.649	77.021	0.17	0.17	2.26	80	0.41	1.79	79	-3.3	81	0.090	99	99	0.2	0.00	300	233	224	118	195	214	472	159	83	67	84	68	74	-0.010	4.43	0.13
443	72.815	77.196	0.17	0.17	2.27	80	0.28	1.79	79	-3.2	81	0.090	100	99	0.2	0.00	299	233	223	118	195	214	469	159	83	67	84	68	74	-0.010	4.41	0.13
444	72.980	77.370	0.17	0.17	2.27	80	-0.03	1.80	79	-3.5	81	0.090	99	98	0.2	0.00	298	232	223	117	194	213	467	158	83	67	84	68	74	-0.010	4.41	0.13
445	73.147	77.546	0.17	0.18	2.27	80	0.05	1.80	79	-3.5	81	0.090	100	100	0.2	0.00	297	232	222	117	194	212	465	158	83	67	83	68	74	-0.010	4.38	0.13
446	73.312	77.720	0.16	0.17	2.25	80	0.39	1.79	79	-3.4	81	0.090	99	98	0.2	0.00	297	232	222	117	193	212	463	157	83	67	83	68	74	-0.009	4.34	0.13
447	73.477	77.895	0.17	0.17	2.26	80	0.38	1.81	79	-3.3	81	0.090	99	99	0.2	0.00	297	231	222	117	193	212	462	157	83	67	83	68	74	-0.009	4.34	0.13
448	73.643	78.070	0.17	0.17	2.27	80	0.16	1.79	79	-3.4	81	0.090	100	99	0.1	-0.05	296	231	221	117	193	212	462	157	83	67	83	68	74	-0.009	4.3	0.13
449	73.809	78.245	0.17	0.18	2.25	80	-0.04	1.79	79	-3.5	81	0.090	100	99	0.0	-0.10	296	231	221	117	193	212	461	157	83	67	84	68	74	-0.009	4.31	0.14
Avg/Tot	73.809	78.245	0.16	0.17	2.23	80		1.78	79		90	0.089	100	100								105.2				60	85	61	75	-0.031		

Wood Heater Lab Data - ASTM E2780 / ASTM E2515

Manufacturer:	Hearth & Home	Equipment Numbers:	
Model:	Dauntless-CAT		
Tracking No.:	2389		
Project No.:	061WS104E		
Run #:	4		
Date:	10/3/19		

TRAIN 1 (First Hour emissions)

Sample Component	Reagent	Filter, Probe or Dish #	Weights		
			Final, mg	Tare, mg	Particulate, mg
B. Front filter catch	Filter	T182S	87.6	87.1	0.5
C. Rear filter catch	Filter				0.0
D. Probe catch*	Probe				0.0
E. Filter seals catch*	Seals				0.0

Sub-Total	Total Particulate, mg:	0.5

TRAIN 1 (Post First Hour Change-out)

Sample Component	Reagent	Filter, Probe or Dish #	Weights		
			Final, mg	Tare, mg	Particulate, mg
B. Front filter catch	Filter	T202AP	179.4	178.3	1.1
C. Rear filter catch	Filter				0.0
D. Probe catch*	Probe	30	114328.4	114328.4	0.0
E. Filter seals catch*	Seals	R885	3532.2	3532.1	0.1

Sub-Total	Total Particulate, mg:	1.2
Train 1 Aggregate	Total Particulate, mg:	**1.7**

TRAIN 2

Sample Component	Reagent	Filter, Probe or Dish #	Weights		
			Final, mg	Tare, mg	Particulate, mg
A. Front filter catch	Filter	T202BP	181.8	180.6	1.2
B. Rear filter catch	Filter				0.0
C. Probe catch*	Probe	53	118273.2	118273.2	0.0
D. Filter seals catch*	Seals	R886	3500.8	3500.6	0.2

Total Particulate, mg:	**1.4**

AMBIENT

Sample Component	Reagent	Filter # or Probe #	Weights		
			Final, mg	Tare, mg	Particulate, mg
A. Front filter catch*	Filter				0.0

Total Particulate, mg:	**0.0**

*Particulate catch that results in a negative number, is assumed to be zero for probes and seals, negative numbers for filters are assumed to be part of the seal weight.

Component	Equations:
A. Front filter catch	Final (mg) - Tare (mg) = Particulate, mg
B. Rear filter catch	Final (mg) - Tare (mg) = Particulate, mg
C. Probe catch	Final (mg) - Tare (mg) = Particulate, mg

Technician Signature: 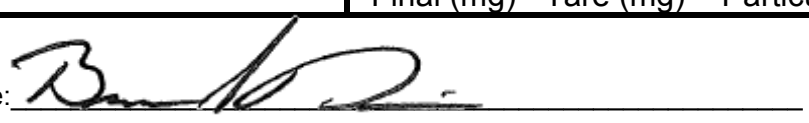

Wood Heater Test Results - ASTM E2780 / ASTM E2515

Manufacturer:	Hearth & Home
Model:	Dauntless-CAT
Project No.:	061WS104E
Tracking No.:	2389
Run:	4
Test Date:	10/03/19

Burn Rate	**1.01**	**kg/hr dry**
Average Tunnel Temperature	90	degrees Fahrenheit
Average Gas Velocity in Dilution Tunnel - vs	19.48	feet/second
Average Gas Flow Rate in Dilution Tunnel - Qsd	12769.6	dscf/hour
Average Delta p	0.089	inches H20
Total Time of Test	449	minutes

	AMBIENT		SAMPLE TRAIN 1		SAMPLE TRAIN 2		FIRST HOUR FILTER (TRAIN 1)	
Total Sample Volume - Vm	0.000	cubic feet	73.809	cubic feet	78.245	cubic feet	9.812	cubic feet
Average Gas Meter Temperature	75	degrees Fahrenheit	80	degrees Fahrenheit	79	degrees Fahrenheit	79	degrees Fahrenheit
Total Sample Volume (Standard Conditions) - Vmstd	0.000	dscf	70.884	dscf	75.080	dscf	9.445	dscf
Total Particulates - m_n	0	mg	1.7	mg	1.4	mg	0.5	mg
Particulate Concentration (dry-standard) - C_f/C_s	0.000000	grams/dscf	0.00002	grams/dscf	0.00002	grams/dscf	0.00005	grams/dscf
Total Particulate Emissions - E_T	0.00	grams	2.29	grams	1.78	grams	0.68	grams
Particulate Emission Rate	0.00	grams/hour	0.31	grams/hour	0.24	grams/hour	0.68	grams/hour
Emissions Factor			0.30	g/kg	0.24	g/kg	0.32	g/kg
Difference from Average Total Particulate Emissions			0.25	grams	0.25	grams		
	Dual Train Comparison Results Are Acceptable							

FINAL AVERAGE RESULTS

Complete Test Run		
Total Particulate Emissions - E_T	2.04	grams
Particulate Emission Rate	**0.27**	**grams/hour**
Emissions Factor	0.27	grams/kg
First Hour Emissions		
Total Particulate Emissions - E_T	0.68	grams
Particulate Emission Rate	0.68	grams/hour
Emissions Factor	0.32	grams/kg
7.5% of Average Total Particulate Emissions	0.15	grams

QUALITY CHECKS

Filter Temps < 90 °F	OK
Filter Face Velocity (47 mm)	OK
Dryer Exit Temp < 80F	OK
Leakage Rate	OK
Ambient Temp (55-90°F)	OK
Negative Probe Weight Eval.	OK
Pro-Rate Variation	ECK 10 MIN. INTERVAL PRO-RAT

Technician Signature:

Wood Heater Efficiency Results - CSA B415.1

Manufacturer: Hearth & Home
Model: Dauntless-CAT
Date: 10/03/19
Run: 4
Control #: 061WS104E
Test Duration: 449
Output Category: II

Technician Signature: _____

Test Results in Accordance with CSA B415.1-09

	HHV Basis	LHV Basis
Overall Efficiency	78.1%	83.6%
Combustion Efficiency	95.7%	95.7%
Heat Transfer Efficiency	82%	87.4%

Output Rate (kJ/h)	15,304	14,518	**(Btu/h)**
Burn Rate (kg/h)	1.04	2.30	**(lb/h)**
Input (kJ/h)	19,603	18,596	**(Btu/h)**

Test Load Weight (dry kg)	7.80	17.20	**dry lb**
MC wet (%)	18.47826087		
MC dry (%)	22.67		
Particulate (g)	2.04		
CO (g)	458		
Test Duration (h)	7.48		

Emissions	Particulate	CO
g/MJ Output	0.02	4.00
g/kg Dry Fuel	0.26	58.76
g/h	0.27	61.27
lb/MM Btu Output	0.04	9.30

Air/Fuel Ratio (A/F)	11.53

VERSION: **2.2** **12/14/2009**

Adjunct to ASTM E XXXX Wood Heater Cordwood Test Method - May 10, 2017 Version

Cordwood Fuel Load Calculators - 12 lb/ft^3 Nominal Load Density

Core 45-65% of Total Load Weight, Remainder 35-55% of Total Load Weight

Values to be input manually

THIS DOCUMENT IS NOT AN ASTM STANDARD; IT IS UNDER CONSIDERATION WITHIN AN ASTM TECHNICAL COMMITTEE BUT HAS NOT RECEIVED ALL APPROVALS REQUIRED TO BECOME AN ASTM STANDARD. IT SHALL NOT BE REPRODUCED OR CIRCULATED OR QUOTED, IN WHOLE OR IN PART, OUTSIDE OF ASTM COMMITTEE ACTIVITIES EXCEPT WITH THE APPROVAL OF THE CHAIRMAN OF THE COMMITTEE HAVING JURISDICTION AND THE PRESIDENT OF THE SOCIETY. *COPYRIGHT ASTM, 100 BARR HARBOR DRIVE, WEST CONSHOHOCKEN, PA 19428. ALL RIGHTS RESERVED.*

For Usable Firebox Volumes up to 3.0 ft^3 - Low and Medium Fire

Nominal Required Load Density (wet basis)	12	lb/ft^3			
Usable Firebox Volume	1.82	ft^3			
Total Nom. Load Wt. Target	21.84	lb			
Total Load Wt. Allowable Range	20.75	to	22.93	lb	
Core Target Wt. Allowable Range	9.828	to	14.20	lb	
Remainder Load Wt. Allowable Range	7.64	to	12.01	lb	
					Mid-Point
Core Load Fuel Pc. Wt. Allowable Range	3.28	to	5.46	lb	4.37
Remainder Load Pc. Wt. Allowable Range	2.18	to	6.55	lb	4.37
	Pc. #				
Core Load Piece Wt. Actual	1	3.58	lb	In Range	
	2	4.36	lb	In Range	
	3	4.07	lb	In Range	
Core Load Total. Wt. Actual		12.01	lb	In Range	
	Pc. #				
Remainder Load Piece Wt.	1	3.10	lb	In Range	
(2 or 3 Pcs.)	2	6.05	lb	In Range	
	3		lb	NA	
Remainder Load Piece Weight Ratio - Small/Large		51%		In Range	≤ 67%
Remainder Load Tot. Wt. Act		9.15	lb	In Range	
Total Load Wt. Actual		21.16	lb	In Range	
Core % of Total Wt.		57%		In Range	45-65%
Remainder % of Total Wt.		43%		In Range	35-55%
Actual Load % of Nominal Target		97%		In Range	95-105%
Actual Fuel Load Density		11.6	lb/ft^3		
Allowable Charcoal Bed Wt. Range (lb)	2.2	to	4.2		Mid-Point
Actual Charcoal Bed Wt.		3.0	lb	In Range	3.2
Actual Fuel Load Ending Wt.		0.0	lb	Valid Test	≥ 90%
Total Wt. of Fuel Burned During Test Run lb.		21.2	lb		

Fuel Piece Moisture Reading (%-dry basis)

1	2	3	Ave.		Pc. Wt. Dry Basis			
21.2	23	20.8	21.7	In Range	2.94	lb	1.33	kg
22.2	25.2	25	24.1	In Range	3.51	lb	1.59	kg
20.3	23.3	25	22.9	In Range	3.31	lb	1.50	kg
19.6	20.8	24	21.5	In Range	2.55	lb	1.16	kg
20	24.8	24.8	23.2	In Range	4.91	lb	2.23	kg
			NA	NA	NA	lb	NA	kg

Total Load Ave. MC % (dry basis)	22.8	In Range			
Total Load Ave. MC % (wet basis)	18.6				
Total Test Load Weight (dry basis) →			17.23	lb	7.82 kg
Total Fuel Weight Burned During Test Run (dry basis)			17.2	lb	7.82 kg

OMNI-Test Laboratories, Inc.

Wood Heater Run Sheets

Client: Hearth & Home Project Number: 0061WS104E Run Number: 4
Model: Dauntless-Flexburn CAT Tracking Number: 2389 Date: 10/3/19
Test Crew: D Davis
OMNI Equipment ID numbers:

Wood Heater Supplemental Data

Start Time: 1304 Booth #: N/A
Stop Time: 2333

Stack Gas Leak Check:
Initial: good Final: good

Sample Train Leak Check:
A: 0.0 @ 6 "Hg
B: 0.0 @ 8 "Hg

Calibrations: Span Gas CO_2: 15.0 CO: 2.0

	Pre Test		Post Test	
	Zero	Span	Zero	Span
Time	See Run 3		2344	2344
CO_2			0.04	14.93
CO			-0.02	1.943

Air Velocity (ft/min): Initial: 250 Final: 250
Scale Audit (lbs): Initial: 10.0 Final: 10.0
Pitot Tube Leak Test: Initial: good Final: good
Stack Diameter (in): 6
Induced Draft: 0.0
% Smoke Capture: 100
Flue Pipe Cleaned Prior to First Test in Series:
Date: 9/30/19 Initials: [illegible]

	Initial	Middle	Ending
P_b (in/Hg)	29.52		29.46
RH (%)	39		26
Ambient (°F)	75		74

Tunnel Traverse

Microtector Reading	dP (in H_2O)	T(°F)
	.074	85
	.084	85
	.075	85
	.072	85
	.078	85
	.082	85
	.082	85
	.080	85
Center:		
	.086	85

Background Filter Volume: N/A

Tunnel Static Pressure (in H_2O):	
Beginning of Test	End of Test
-.280	-.280

Technician Signature: [illegible] Date: 10/3/19

OMNI-Test Laboratories, Inc.

Wood Heater Run Sheets

Client: Hearth & Home Project Number: 0061WS104E Run Number: 4
Model: Dauntless-Flexburn CAT Tracking Number: 2389 Date: 10/3/19
Test Crew: B Davis
OMNI Equipment ID numbers:

Wood Heater Run Notes

Air Control Settings

Primary:

Fully Closed

Secondary: Fixed

Tertiary/Pilot: N/A

Fan: On Low

Preburn Notes

Time	Notes
N/A	

Test Notes

Sketch test fuel configuration:

See photo

Start up procedures & Timeline:

Bypass: open until 45 seconds
Fuel loaded by: 40 seconds
Door closed at: 45 seconds
Primary air: AL test setting entire test

Notes: FAN on Low entire test

Time	Notes
60	Changed front filter in train A.

Technician Signature: B Davis Date: 10/3/19

Run 4

Low Burn

Proportional Rate Verification
10-minute data

Wood Heater Test Data

Run: 4

Manufacturer: Hearth & Home
Model: Dauntless-CAT
Tracking No.: 2389
Project No.: 061WS104E
Test Date: 03-Oct-19
Beginning Clock Time: 13;04

Total Sampling Time: 449 min
Recording Interval: 10 min
Background Sample Volume: _____ cubic feet

Meter Box Y Factor: 0.992 (1) 0.989 (2) _____ (Amb)

Barometric Pressure:	Begin	Middle	End	Average
	29.52		29.46	29.49 0

OMNI Equipment Numbers: _____

PM Control Modules: 371, 372
Dilution Tunnel MW(dry): 29.00 lb/lb-mole
Dilution Tunnel MW(wet): 28.78 lb/lb-mole
Dilution Tunnel H2O: 2.00 percent
Dilution Tunnel Static: -0.280 "H2O
Tunnel Area: 0.19635 ft2
Pitot Tube Cp: 0.99

Avg. Tunnel Velocity: 19.47 ft/sec.
Initial Tunnel Flow: 209.0 scfm
Average Tunnel Flow: 212.8 scfm
Post-Test Leak Check (1): 0.000 cfm @ 6 in. Hg
Post-Test Leak Check (2): 0.000 cfm @ 8 in. Hg
Average Test Piece Fuel Moisture: 22.67 Dry Basis %

Technician Signature: _____

Velocity Traverse Data

	Pt.1	Pt.2	Pt.3	Pt.4	Pt.5	Pt.6	Pt.7	Pt.8	Center	
Initial dP	0.074	0.084	0.078	0.072	0.074	0.082	0.082	0.080	0.086	"H2O
Temp:	85	85	85	85	85	85	85	85	85	°F

V_{strav} 19.06 ft/sec V_{scent} 19.89 ft/sec F_p 0.959

	Particulate Sampling Data														Fuel Weight (lb)		Temperature Data (°F)													Stack Gas Data		
Elapsed Time (min)	Gas Meter 1 (ft^3)	Gas Meter 2 (ft^3)	Sample Rate 1 (cfm)	Sample Rate 2 (cfm)	Orifice dH 1 ("H_2O)	Meter 1 Temp (°F)	Meter 1 Vacuum ("Hg)	Orifice dH 2 ("H_2O)	Meter 2 Temp (°F)	Meter 2 Vacuum ("Hg)	Dilution Tunnel (°F)	Dilution Tunnel Center dP	Pro. Rate 1	Pro. Rate 2	Scale Reading	Weight Change	Firebox Top	Firebox Bottom	Firebox Back	Firebox Left	Firebox Right	Avg. Stove Surface	Catalyst Exit	Stack	Filter 1	Dryer Exit 1	Filter 2	Dryer Exit 2	Ambient	Draft ("H_2O)	CO_2 (%)	CO (%)
0	0.000	0.000			-0.01	78	1.63	0.01	77	1.6	92	0.090																	75			
10	1.575	1.699	0.16	0.17	2.12	79	0.21	1.70	77	-3.3	92	0.090	96	97		0.00													74			
20	3.202	3.422	0.16	0.17	2.31	79	0.45	1.80	77	-3.4	92	0.080	105	105		0.00													74			
30	4.858	5.164	0.17	0.17	2.29	79	0.14	1.79	77	-3.5	92	0.090	101	100		0.00													74			
40	6.512	6.903	0.17	0.17	2.25	79	0.52	1.79	77	-3.2	93	0.090	101	100		0.00													75			
50	8.163	8.640	0.17	0.17	2.28	79	0.2	1.80	78	-3.5	94	0.090	100	100		0.00													74			
60	9.812	10.376	0.16	0.17	2.25	80	0.11	1.78	78	-3.4	96	0.080	106	106		0.00													74			
70	11.461	12.110	0.16	0.17	2.24	80	0.12	1.78	78	-3.3	96	0.090	100	100		0.00													73			
80	13.103	13.845	0.16	0.17	2.22	80	0.17	1.77	78	-3.5	96	0.080	106	106		0.00													74			
90	14.742	15.580	0.16	0.17	2.22	80	0.38	1.78	78	-3.5	96	0.090	100	100		0.00													74			
100	16.380	17.315	0.16	0.17	2.23	80	0.24	1.77	78	-3.3	96	0.090	100	100		0.00													75			
110	18.016	19.050	0.16	0.17	2.22	80	0.49	1.77	78	-3.3	97	0.090	100	100		0.00													74			
120	19.654	20.793	0.16	0.17	2.23	80	0.51	1.80	78	-3.5	97	0.090	100	100		0.00													76			
130	21.298	22.538	0.16	0.17	2.27	81	0.31	1.79	78	-3.4	97	0.090	100	100		0.00													75			
140	22.950	24.281	0.17	0.17	2.25	81	0.08	1.79	78	-3.4	97	0.080	107	106		0.00													75			
150	24.602	26.024	0.17	0.17	2.26	81	0.24	1.79	79	-3.4	96	0.090	100	100		0.00													74			
160	26.249	27.766	0.16	0.17	2.25	81	0.34	1.80	79	-3.4	95	0.090	100	100		0.00													75			
170	27.895	29.510	0.16	0.17	2.23	81	-0.01	1.80	79	-3.3	95	0.090	100	100		0.00													77			
180	29.542	31.254	0.16	0.17	2.24	81	-0.06	1.80	79	-3.3	94	0.090	100	100		0.00													76			
190	31.188	32.999	0.16	0.17	2.25	81	0.45	1.79	79	-3.3	93	0.090	100	100		0.00													77			
200	32.834	34.743	0.16	0.17	2.24	81	0.41	1.79	79	-3.4	92	0.090	100	100		0.00													77			
210	34.479	36.486	0.16	0.17	2.22	81	0.07	1.79	79	-3.3	91	0.080	105	105		0.00													77			
220	36.123	38.230	0.16	0.17	2.22	81	0.4	1.78	79	-3.5	91	0.090	99	100		0.00													75			
230	37.764	39.973	0.16	0.17	2.22	81	-0.09	1.78	79	-3.3	91	0.090	99	99		0.00													78			
240	39.406	41.717	0.16	0.17	2.24	81	0.3	1.78	79	-3.5	90	0.090	99	99		0.00													77			
250	41.048	43.462	0.16	0.17	2.24	81	-0.07	1.79	79	-3.5	89	0.090	99	99		0.00													76			
260	42.691	45.209	0.16	0.17	2.23	81	-0.06	1.79	79	-3.4	88	0.090	99	99		0.00													75			
270	44.335	46.956	0.16	0.17	2.23	81	0.42	1.79	79	-3.3	88	0.090	99	99		0.00													77			
280	45.979	48.702	0.16	0.17	2.23	81	0.33	1.79	79	-3.3	87	0.090	99	99		0.00													77			
290	47.623	50.449	0.16	0.17	2.21	81	0.45	1.79	79	-3.4	86	0.090	99	99		0.00													75			
300	49.266	52.197	0.16	0.17	2.22	81	-0.06	1.81	79	-3.4	86	0.090	99	99		0.00													75			
310	50.908	53.944	0.16	0.17	2.24	81	0.44	1.80	79	-3.3	85	0.090	99	99		0.00													76			
320	52.551	55.692	0.16	0.17	2.23	81	0.16	1.80	79	-3.5	85	0.090	99	99		0.00													76			
330	54.191	57.440	0.16	0.17	2.23	81	0.45	1.80	79	-3.3	85	0.090	99	99		0.00													75			
340	55.831	59.187	0.16	0.17	2.22	80	0.16	1.79	79	-3.4	84	0.090	99	99		0.00													74			
350	57.471	60.935	0.16	0.17	2.22	80	0.29	1.79	79	-3.5	83	0.090	99	99		0.00													75			
360	59.111	62.682	0.16	0.17	2.23	80	-0.1	1.79	79	-3.5	83	0.090	99	99		0.00													74			

Wood Heater Test Data

Run: 4

Manufacturer: Hearth & Home
Model: Dauntless-CAT
Tracking No.: 2389
Project No.: 061WS104E
Test Date: 03-Oct-19
Beginning Clock Time: 13;04

Total Sampling Time: 449 min
Recording Interval: 10 min
Background Sample Volume: _____ cubic feet

Meter Box Y Factor: 0.992 (1) 0.989 (2) _____ (Amb)

Barometric Pressure:	Begin	Middle	End	Average
	29.52		29.46	29.49 0

OMNI Equipment Numbers: _____

PM Control Modules: 371, 372
Dilution Tunnel MW(dry): 29.00 lb/lb-mole
Dilution Tunnel MW(wet): 28.78 lb/lb-mole
Dilution Tunnel H2O: 2.00 percent
Dilution Tunnel Static: -0.280 "H2O
Tunnel Area: 0.19635 ft2
Pitot Tube Cp: 0.99

Avg. Tunnel Velocity: 19.47 ft/sec.
Initial Tunnel Flow: 209.0 scfm
Average Tunnel Flow: 212.8 scfm
Post-Test Leak Check (1): 0.000 cfm @ 6 in. Hg
Post-Test Leak Check (2): 0.000 cfm @ 8 in. Hg
Average Test Piece Fuel Moisture: 22.67 Dry Basis %

Technician Signature: _____

Velocity Traverse Data

	Pt.1	Pt.2	Pt.3	Pt.4	Pt.5	Pt.6	Pt.7	Pt.8	Center	
Initial dP	0.074	0.084	0.078	0.072	0.074	0.082	0.082	0.080	0.086	"H2O
Temp:	85	85	85	85	85	85	85	85	85	°F

V_{strav} 19.06 ft/sec V_{scent} 19.89 ft/sec F_p 0.959

	Particulate Sampling Data														Fuel Weight (lb)		Temperature Data (°F)													Stack Gas Data		
Elapsed Time (min)	Gas Meter 1 (ft^3)	Gas Meter 2 (ft^3)	Sample Rate 1 (cfm)	Sample Rate 2 (cfm)	Orifice dH 1 ("H_2O)	Meter 1 Temp (°F)	Meter 1 Vacuum ("Hg)	Orifice dH 2 ("H_2O)	Meter 2 Temp (°F)	Meter 2 Vacuum ("Hg)	Dilution Tunnel (°F)	Dilution Tunnel Center dP	Pro. Rate 1	Pro. Rate 2	Scale Reading	Weight Change	Firebox Top	Firebox Bottom	Firebox Back	Firebox Left	Firebox Right	Avg. Stove Surface	Catalyst Exit	Stack	Filter 1	Dryer Exit 1	Filter 2	Dryer Exit 2	Ambient	Draft ("H_2O)	CO_2 (%)	CO (%)
370	60.749	64.430	0.16	0.17	2.22	80	0.28	1.79	79	-3.4	83	0.090	98	99		0.00													74			
380	62.388	66.179	0.16	0.17	2.22	80	0.44	1.79	79	-3.3	82	0.090	98	99		0.00													74			
390	64.031	67.927	0.16	0.17	2.27	80	0.29	1.80	79	-3.5	82	0.090	99	99		0.00													75			
400	65.689	69.676	0.17	0.17	2.28	80	-0.1	1.80	79	-3.4	82	0.090	100	99		0.00													74			
410	67.348	71.426	0.17	0.18	2.27	80	0.4	1.79	79	-3.4	82	0.090	100	99		0.00													74			
420	69.005	73.174	0.17	0.17	2.26	80	0.15	1.79	79	-3.4	82	0.090	100	99		0.00													73			
430	70.661	74.923	0.17	0.17	2.26	80	0.41	1.79	79	-3.4	81	0.090	99	99		0.00													74			
440	72.318	76.671	0.17	0.17	2.28	80	-0.01	1.79	79	-3.5	81	0.090	99	99		0.00													74			
449	73.809	78.245	0.15	0.16	2.25	80	-0.04	1.79	79	-3.5	81	0.090	99	99		0.00													74			
Avg/Tot	73.809	78.245	0.16	0.17	2.19	80		1.75	79		89	0.089	100	100								0.0				#DIV/0!	#DIV/0!	#DIV/0!	75	#DIV/0!		

Wood Heater Lab Data - ASTM E2780 / ASTM E2515

Manufacturer: Hearth & Home
Model: Dauntless-CAT
Tracking No.: 2389
Project No.: 061WS104E
Run #: 4
Date: 10/3/19

Equipment Numbers:

TRAIN 1 (First Hour emissions)

Sample Component	Reagent	Filter, Probe or Dish #	Weights		
			Final, mg	Tare, mg	Particulate, mg
B. Front filter catch	Filter	T182S	87.6	87.1	0.5
C. Rear filter catch	Filter				0.0
D. Probe catch*	Probe				0.0
E. Filter seals catch*	Seals				0.0

Sub-Total Total Particulate, mg: 0.5

TRAIN 1 (Post First Hour Change-out)

Sample Component	Reagent	Filter, Probe or Dish #	Weights		
			Final, mg	Tare, mg	Particulate, mg
B. Front filter catch	Filter	T202AP	179.4	178.3	1.1
C. Rear filter catch	Filter				0.0
D. Probe catch*	Probe	30	114328.4	114328.4	0.0
E. Filter seals catch*	Seals	R885	3532.2	3532.1	0.1

Sub-Total Total Particulate, mg: 1.2

Train 1 Aggregate Total Particulate, mg: **1.7**

TRAIN 2

Sample Component	Reagent	Filter, Probe or Dish #	Weights		
			Final, mg	Tare, mg	Particulate, mg
A. Front filter catch	Filter	T202BP	181.8	180.6	1.2
B. Rear filter catch	Filter				0.0
C. Probe catch*	Probe	53	118273.2	118273.2	0.0
D. Filter seals catch*	Seals	R886	3500.8	3500.6	0.2

Total Particulate, mg: **1.4**

AMBIENT

Sample Component	Reagent	Filter # or Probe #	Weights		
			Final, mg	Tare, mg	Particulate, mg
A. Front filter catch*	Filter				0.0

Total Particulate, mg: **0.0**

*Particulate catch that results in a negative number, is assumed to be zero for probes and seals, negative numbers for filters are assumed to be part of the seal weight.

Component	Equations:
A. Front filter catch	Final (mg) - Tare (mg) = Particulate, mg
B. Rear filter catch	Final (mg) - Tare (mg) = Particulate, mg
C. Probe catch	Final (mg) - Tare (mg) = Particulate, mg

Technician Signature:

Wood Heater Test Results - ASTM E2780 / ASTM E2515

Manufacturer:	Hearth & Home
Model:	Dauntless-CAT
Project No.:	061WS104E
Tracking No.:	2389
Run:	4
Test Date:	10/03/19

Burn Rate	**1.01**	**kg/hr dry**
Average Tunnel Temperature	89	degrees Fahrenheit
Average Gas Velocity in Dilution Tunnel - vs	19.47	feet/second
Average Gas Flow Rate in Dilution Tunnel - Qsd	12765.6	dscf/hour
Average Delta p	0.089	inches H20
Total Time of Test	449	minutes

	AMBIENT		SAMPLE TRAIN 1		SAMPLE TRAIN 2		FIRST HOUR FILTER (TRAIN 1)	
Total Sample Volume - Vm	0.000	cubic feet	73.809	cubic feet	78.245	cubic feet	9.812	cubic feet
Average Gas Meter Temperature	75	degrees Fahrenheit	80	degrees Fahrenheit	79	degrees Fahrenheit	80	degrees Fahrenheit
Total Sample Volume (Standard Conditions) - Vmstd	0.000	dscf	70.880	dscf	75.072	dscf	9.423	dscf
Total Particulates - m_n	0	mg	1.7	mg	1.4	mg	0.5	mg
Particulate Concentration (dry-standard) - C_r/C_s	0.000000	grams/dscf	0.00002	grams/dscf	0.00002	grams/dscf	0.00005	grams/dscf
Total Particulate Emissions - E_T	0.00	grams	2.29	grams	1.78	grams	0.68	grams
Particulate Emission Rate	0.00	grams/hour	0.31	grams/hour	0.24	grams/hour	0.68	grams/hour
Emissions Factor			0.30	g/kg	0.24	g/kg	#DIV/0!	g/kg
Difference from Average Total Particulate Emissions			0.25	grams	0.25	grams		

Dual Train Comparison Results Are Acceptable

	FINAL AVERAGE RESULTS	
Complete Test Run		
Total Particulate Emissions - E_T	2.04	grams
Particulate Emission Rate	**0.27**	**grams/hour**
Emissions Factor	0.27	grams/kg
First Hour Emissions		
Total Particulate Emissions - E_T	0.68	grams
Particulate Emission Rate	0.68	grams/hour
Emissions Factor	#DIV/0!	grams/kg
7.5% of Average Total Particulate Emissions	0.15	grams

	QUALITY CHECKS
Filter Temps < 90 °F	OK
Filter Face Velocity (47 mm)	OK
Dryer Exit Temp < 80F	OK
Leakage Rate	OK
Ambient Temp (55-90°F)	OK
Negative Probe Weight Eval.	OK
Pro-Rate Variation	OK

Technician Signature: _____

Section 4

Quality Assurance/Quality Control

QUALITY ASSURANCE/QUALITY CONTROL

OMNI follows the guidelines of ISO/IEC 17025, "General Requirements for the Competence of Testing and Calibration Laboratories," and the quality assurance/quality control (QA/QC) procedures found in *OMNI*'s Quality Assurance Manual.

OMNI's scope of accreditation includes, but is not limited to, the following:

- ANSI (American National Standards Institute) for certification of product to safety standards.
- To perform product safety testing by the International Accreditation Service, Inc. (formerly ICBO ES) under accreditation as a testing laboratory designated TL-130.
- To perform product safety testing as a "Certification Organization" by the Standards Council of Canada (SCC).
- Serving as a testing laboratory for the certification of wood heaters by the U.S. Environmental Protection Agency.

This report is issued within the scope of *OMNI*'s accreditation. Accreditation certificates are available upon request.

The manufacturing facilities and quality control system for the production of the Dauntless FlexBurn Catalytic at Hearth and Home Technologies were evaluated to determine if sufficient to maintain conformance with OMNI's requirements for product certification. OMNI has concluded that the manufacturing facilities, processes, and quality control system are adequate to produce the appliance congruous with the standards and model codes to which it was evaluated.

This report shall not be reproduced, except in full, without the written approval of OMNI-Test Laboratories, Inc.

Sample Analysis

Analysis Worksheets
Tared Filter, Probe, and O-Ring Data

OMNI-Test Laboratories, Inc.

Wood Heater Run Sheets

Client: Hearth & Home Project Number: 0061WS104E Run Number: 1
Model: Dauntless-Flexburn CAT Tracking Number: 2389 Date: 10/2/19
Test Crew: B Davis
OMNI Equipment ID numbers: 637, 283A, 592

ASTM E2515 Lab Sheet

Assembled By: B Davis

Date/Time in Dessicator: 10/8/19 0910

	Weighing #1	Weighing #2	Weighing #3	Weighing #4	Weighing #5
Date/Time:	10/9/19 1010	10/10/19 0905	10/11/19 0814		
R/H %:	19.8	21.4	20.7		
Temp:	71.3	70.9	72.5		
200 mg Audit:	200.1	200.1	200.1		
2 g Audit:	2000.3	2000.3	2000.3		
100 g Audit:	99997.5	99997.8	99997.8		
Initials:	BL	BL	BL		

Train	Element	ID #	Tare (mg)	Weight (mg)	Weight (mg)	Weight (mg)	Weight (mg)	Weight (mg)
A (First Hour)	Front Filter	T178S	86.1	92.7	92.6	✓		
	Rear Filter							
	Probe							
	O-Ring Set							
A (Remainder)	Front Filter	T200AP	179.1	182.1	182.0	✓		
	Rear Filter							
	Probe	2	115016.0	115016.7	115016.6	✓		
	O-Ring Set	R881	3513.6	3514.1	3513.8	3513.6 ✓		
B	Front Filter	T200BP	180.1	188.8	188.8	✓		
	Rear Filter	T180CS	86.7	88.0	88.0	✓		
	Probe	6	115349.3	115350.2	115349.9	115350.0 ✓		
	O-Ring Set	R882	4281.8	4282.5	4282.3	✓		
BG	Filter	MA						

Technician Signature: [signature] Date: 10/11/19

OMNI-Test Laboratories, Inc.

Wood Heater Run Sheets

Client: Hearth & Home Project Number: 0061WS104E Run Number: 2
Model: Dauntless-Flexburn CAT Tracking Number: 2389 Date: 10/2/19
Test Crew: B Davis
OMNI Equipment ID numbers: 637, 283A, 592

ASTM E2515 Lab Sheet

Assembled By: B Davis

Date/Time in Dessicator: 10/8/19 0910

	Weighing #1	Weighing #2	Weighing #3	Weighing #4	Weighing #5
Date/Time:	10/9/19 1010	10/10/19 0905	10/14/19 0819		
R/H %:	19.5	21.4	20.7		
Temp:	71.3	70.9	72.5		
200 mg Audit:	200.1	200.1	200.1		
2 g Audit:	2000.3	2000.3	2000.3		
100 g Audit:	99997.5	99997.8	99997.8		
Initials:	BL	BL	BL		

Train	Element	ID #	Tare (mg)	Weight (mg)	Weight (mg)	Weight (mg)	Weight (mg)	Weight (mg)
A (First Hour)	Front Filter	T185	86.9	87.6	87.5	✓		
	Rear Filter							
	Probe							
	O-Ring Set							
A (Remainder)	Front Filter	T201AP	177.4	179.8	179.9	✓		
	Rear Filter							
	Probe	7	114981.8	114981.9	114981.8	✓		
	O-Ring Set	R883	3544.4	3544.8	3544.7	✓		
B	Front Filter	T201BP	177.6	180.7	180.8	✓		
	Rear Filter							
	Probe	15	114341.5	114341.6	114341.5	✓		
	O-Ring Set	R884	3568.8	3569.3	3569.1	✓		
BG	Filter	N/A						

Technician Signature: [signature] Date: 10/15/19

OMNI-Test Laboratories, Inc.

Wood Heater Run Sheets

Client: Hearth & Home Project Number: 0061WS104E Run Number: 8
Model: Dauntless-Flexburn CAT Tracking Number: 2389 Date: 10/3/19
Test Crew: B Davis
OMNI Equipment ID numbers: 637, 2534, 592

ASTM E2515 Lab Sheet

Assembled By: B Davis

Date/Time in Dessicator: 10/8/19 0910

	Weighing #1	Weighing #2	Weighing #3	Weighing #4	Weighing #5
Date/Time:	10/9/19 1010	10/14/19 0905	10/14/19 0849		
R/H %:	19.8	21.4	20.7		
Temp:	71.3	70.9	72.5		
200 mg Audit:	200.1	200.1	200.1		
2 g Audit:	2000.3	2000.3	2000.3		
100 g Audit:	99997.5	99997.8	99997.8		
Initials:	BL	BR	JL		

Train	Element	ID #	Tare (mg)	Weight (mg)	Weight (mg)	Weight (mg)	Weight (mg)	Weight (mg)
A (First Hour)	Front Filter	T182B	87.1	87.7	87.6	✓		
	Rear Filter							
	Probe							
	O-Ring Set							
A (Remainder)	Front Filter	T202AP	178.3	179.5	179.4	✓		
	Rear Filter							
	Probe	30	114328.4	114328.4	114328.4	✓		
	O-Ring Set	R885	3532.1	3532.5	3532.2	3532.2 ✓		
B	Front Filter	T202BP	180.6	182.0	181.8	✓		
	Rear Filter							
	Probe	53	118273.2	118273.2	118273.2	✓		
	O-Ring Set	R886	3500.6	3500.9	3500.8	✓		
BG	Filter	N/A						

Technician Signature: [signature] Date: 10/18/19

Tare Sheet: (check one) **Probes**_____ **47mm Filters**✓ **100mm Filters**_____ **O-Ring Pair**_____

Prepared By: B Davis Balance ID #: omni-00637 Thermohygrometer ID #: omni-00592 Audit Weight ID #/Mass: omni-00283A / 200 mg

Placed in Dessicator: Date: 6/27/19 Time: 1210	Date: 6-28-19 Time: 14:40 RH %: 24 T (°F): 73.6 Audit: 200.0	Date: 6/29/19 Time: 08:00 RH %: 32 T (°F): 72.8 Audit: 200.1	Date: Time: RH %: T (°F): Audit:	Date: Time: RH %: T (°F): Audit:	Date Used	Project Number	Run No.
ID #							
T170AP	~~83.7~~ 166.0	166.1					
T170BP	165.5	165.4					
T171AP	166.4	166.3					
T171BP	167.4	167.3					
T172AP	166.8	166.9					
T172BP	167.3	167.4					
T173AP	167.1	167.0					
T173BP	167.5	167.6					
T174AP	167.8	167.6					
T174BP	167.5	167.5					
T175S	84.2	84.3					
T176S	84.0	84.0					
T177S	84.5	84.4					
T178S	83.8	83.8					
T179S	86.0	86.1			10/2/19	0061WS104E	1
T180S	86.8	86.7					
T181S	86.8	86.9			10/2/19	0061WS104E	2
T182S	87.2	87.1			10/3/19	↓	4
T183S	87.1	87.1					
T184S	87.5	87.5					
	Initials: K	Initials: K	Initials:	Initials:			

Final Technician Signature: [signature] Date: 6/29/19 Evaluator signature: [signature]

Control No. P-SFDP-0002.xls, Effective date: 2/1/2017

Tare Sheet: (check one) **Probes**_____ **47mm Filters**_✓_ **100mm Filters**_____ **O-Ring Pair**_____

Prepared By: BDAUS Balance ID #: OMNI-00637 Thermohygrometer ID #: OMNI-00592 Audit Weight ID #/Mass: OMNI 283A / 200 mg

Placed in Dessicator: Date: 9/23/19 Time: 0825	Date: 9/24/19 Time: 0900 RH %: 17.9 T (°F): 75.5 Audit: 200.1	Date: 9/25/19 Time: 10:03 RH %: 21.2 T (°F): 73.4 Audit: 200.0	Date: 9/26/19 Time: 10:13 RH %: 25.0 T (°F): 73.9 Audit: 200.1	Date: Time: RH %: T (°F): Audit:	Date Used	Project Number	Run No.
ID #							
T200AP	179.1	179.1	✓		10/2/19	006/WS 104 E	1
T200BP	180.1	180.1	✓		↓	↓	↓
T201AP	177.6	177.4	✓		10/2/19		2
T201BP	177.7	177.4	177.6	✓	↓		↓
T202AP	178.6	178.3	178.3	✓	10/3/19		4
T202BP	180.8	180.4	180.6	✓	↓	↓	↓
T203AP	179.8	179.6	✓				
T203BP	180.3	180.0	180.0	✓			
T204AP	182.1	181.8	181.6	✓			
T204BP	183.7	183.4	183.4	✓			
T205AP	183.2	183.1	✓				
T205BP	181.6	181.4	✓				
T206AP	181.5	181.1	181.3	✓			
T206BP	182.2	182.0	✓				
T207AP	179.5	179.1	179.1	✓			
T207BP	179.7	179.3	179.2	✓			
T208AP	180.1	179.8	180.0	✓			
T208BP	179.2	178.9	179.1	✓			
T209AP	178.5	178.2	178.4	✓			
T209BP	178.8	178.4	178.5	✓			
	Initials: BD	Initials: BD	Initials: TT	Initials:			

Final Technician Signature: BD Date: 9/26/19 Evaluator signature: [signature]

Control No. P-SFDP-0002.xls, Effective date: 2/1/2017

Tare Sheet: (check one) **Probes** ✓ **47mm Filters**____ **100mm Filters**____ **O-Ring Pair**____

Prepared By: B Davis Balance ID #: omni - 00637 Thermohygrometer ID #: omni - 00592 Audit Weight ID #/Mass: omni - 00283A / 100 g

Placed in Dessicator: Date: 9/24/19 Time: 0815	Date: 9/25/19 Time: 1040 RH %: 21.9 T (°F): 75.5 Audit: 99997.8	Date: 9/26/19 Time: 0858 RH %: 25.0 T (°F): 73.9 Audit: 99998.0	Date: 9/27/19 Time: 08:12 RH %: 23.6 T (°F): 71.7 Audit: 99997.9	Date: Time: RH %: T (°F): Audit:	Date Used	Project Number	Run No.
ID #							
2	115016.0	115016.0 ✓			10/2/19	006/WS104/E	1
6	115349.3	115349.3 ✓			↓	↓	↓
7	114981.6	114981.8 ✓			10/2/19		2
15	114341.4	114341.5 ✓			↓		↓
30	114328.2	114328.4 ✓			10/3/19		4
53	118273.0	118273.2 ✓			↓		↓
56	118613.1	118613.2 ✓					
36	114883.4	114883.6 ✓					
62	117660.9	117660.9 ✓					
66	118454.9	118455.0 ✓					
64	118206.7	118206.8 ✓					
65	117084.1	117084.3 ✓					
67	117758.0	117758.3	117758.1 ✓				
68	116804.1	116804.3 ✓					
	Initials: BA	Initials: TT	Initials: TT	Initials:			

Final Technician Signature: [signature] Date: 9/26/19 Evaluator signature: [signature]

Control No. P-SFDP-0002.xls, Effective date: 2/1/2017

Tare Sheet: (check one) **Probes**_____ **47mm Filters**_____ **100mm Filters**_____ **O-Ring Pair** ✓

Prepared By: B Davis Balance ID #: OMNI-00637 Thermohygrometer ID #: OMNI-00592 Audit Weight ID #/Mass: OMNI-2834 1 g

Placed in Dessicator: Date: 9/20/19 Time: 0815	Date: 9/23/19 Time: 0920 RH %: 27.9 T (°F): 74.6 Audit: ~~2664.1~~ 5000.0	Date: 9/24/19 Time: 0950 RH %: 17.9 T (°F): 75.5 Audit: 5000.1	Date: 9/25/19 Time: 10:03 RH %: 21.2 T (°F): 73.4 Audit: 5000.0	Date: Time: RH %: T (°F): Audit:	Date Used	Project Number	Run No.
ID #							
R881	3514.1	3513.6	3513.6	✓	10/2/19	006/WS104 E	1
R882	4282.2	4281.9	4281.8	✓	↓	↓	↓
R883	3544.8	3544.3	3544.4	✓	10/2/19		2
R884	3569.4	3568.8	3568.8	✓	↓		↓
R885	3532.3	3532.0	3532.1	✓	10/3/19		4
R886	3501.1	3500.6	3500.6	✓	↓	↓	↓
R887	3487.4	3487.1	3487.0	✓			
R888	3334.4	3333.9	3334.1	✓			
R889	3295.2	3295.1	✓				
R890	3368.9	3368.8	✓				
R891	3386.6	3386.3	3386.5	✓			
R892	3294.8	3294.8	✓				
R893	4155.8	4155.8	✓				
R894	3364.5	3364.4	✓				
R895	4102.7	4102.6	✓				
R896	3330.4	3330.2	✓				
R897	3402.0	3402.1	✓				
R898	3322.4	3322.5	✓				
R899	3310.5	3310.6	✓				
R900	3421.7	3421.8	✓				
	Initials: BA	Initials: BA	Initials: BA	Initials: KM			

Final Technician Signature: BA Date: 9/25/19 Evaluator signature: K. Morgan

Calibrations

Methods ASTM E2515, ASTM E3053

ID #	Lab Name/Purpose	Log Name	Attachment Type
132	10 lb Weight	Weight Standard, 10 lb.	Calibration Certificate
82919	Platform Scale	Digital Floor – GSE 350	Calibration Certificate
650	Digital Barometer	Traceable Barometer	Calibration Certificate
283A	Audit Weights	Troemner 21pc Msas Set	Calibration Certificate
371	Sample Box / Dry Gas Meter	Apex Automated Emissions Sampling Box	Calibration Log
372	Sample Box / Dry Gas Meter	Apex Automated Emissions Sampling Box	Calibration Log
410	Microtector	Dwyer Microtector	Calibration Certificate
559	Vaneometer	Dwyer Vaneometer	Equipment Record
592	Thermohygrometer	Omega Digital Thermohygrometer	Calibration Log
420	Combustion Gas Analyzer	CAI Gas Analyzer	See Run Sheet
637	Milligram Balance	Analytical Balance - Mettler - Toledo	Calibration Certificate

SCALE WEIGHT CALIBRATION DATA SHEET

Weight to be calibrated: 10 pounds

ID Number: OMNI-00132

Standard Calibration Weight: 10 pounds

ID Number: OMNI-00255

Scale Used: MTW-150K

ID Number: OMNI-00353

Date: 2/23/2018 By: B. Davis

Standard Weight (A) (Lb.)	Weight Verified (B) (Lb.)	Difference (A - B)	% Error
10.0	10.0	0.0	0

*Acceptable tolerance is 1%.

This calibration is traceable to NIST using calibrated standard weights.

Technician signature: [signature] Date: 2/23/18

FARNHAM'S SCALE SYSTEMS

PO Box 450; 289 VT-64
Williamstown, VT 05679
802-433-6000

SCALE INSPECTION AND TEST REPORT

cindy@farnhamscales.com

CUSTOMER: VT Castings
ADDRESS: VT Casting Roads
Bethal VT

SCALE #	SCALE LOCATION
MAKE-MODEL	SERIAL NUMBER
GSE 350	
SCALE TYPE	
Digital Floor	
SCALE CAPACITY	
700 x .05 LBs	

CORNER TESTS

WEIGHT USED	AS FOUND	AS LEFT
200 LBs	200.00	
	200.00	
	199.90	
	199.90	

LB / OZ / G / KG

TEST RESULTS

VT ID#	TEST WT	AS FOUND	ERROR	AS LEFT	ERROR
	0	0	0		
	50	50.00	Ø		
	100	100.00	Ø		
	200	200.00	Ø		
	300	300.00	Ø		
	400	399.95	-.05		
	500	499.95	-.05		

REMARKS AND RECOMMENDATIONS

Scale is in tolerance

CALIBRATION TOLERANCE: +/- 3 Grads
1 Grad = .05 LBs

AS FOUND:	ACCEPT	REJECT
AS LEFT:	ACCEPT	REJECT

DUE DATE: 8-2020
COMPLETE DATE: 8-29-19
TECH 1: NF
TECH 2:

CUSTOMER SIGNATURE: X

22 Albiston Way
Auburn, ME 04210
800-292-6218
207-777-6218
Fax 207-777-6215
www.specair.com

Date: 09/05/2019

Certificate of Analysis

Customer:
HEARTH & HOME

Order #: 1613110

Results are reported in mole percent, unless otherwise indicated. Mixes are prepared via partial pressure methods, or gravimetrically, using high load high sensitivity electronic scales. Prior to use, scales are verified for accuracy using applicable NIST traceable weights; analyses are calibrated against reference materials traceable to NIST weights and/or NIST gas reference materials.

Cylinder Serial #: AS0720066 **Cylinder Size:** EC2 **CGA Connection:** 580 **Fill Pressure:** 2000 PSI

Analysis: Nitrogen Batch Analysis **Lot #:** 4924801

Component(s):	Requested Concentration(s):	Actual Concentration(s):
Oxygen	< 2 PPM	0.6 PPM
Moisture	< 3 PPM	0.4 PPM
THC	< 0.5 PPM	< 0.1 PPM

Expiration Date: 09/2022

Comments: MEETS OR EXCEEDS 99.999% ULTRA HIGH PURITY

Approved By:

Ron Abbott

Ron Abbott

The information contained herein has been prepared at your request by qualified experts. While we believe that the information is accurate within the limits of the analytical methods employed, and is complete to the extent of the specific analyses performed, we make no warranty or representation as to the suitability of the use of the information for any particular purpose. The information is offered with the understanding that any use of the information is at the sole discretion and risk of the user. In no event shall the liability arising out of the use of the information contained herein exceed the fee established for providing such information.

22 Albiston Way
Auburn, ME 04210
800-292-6218
207-777-6218
Fax 207-777-6215
www.specair.com

Date: 09/05/2019

Certificate of Analysis

Customer:
HEARTH & HOME

Order #: 1613110

Results are reported in mole percent, unless otherwise indicated. Mixes are prepared via partial pressure methods, or gravimetrically, using high load high sensitivity electronic scales. Prior to use, scales are verified for accuracy using applicable NIST traceable weights; analyses are calibrated against reference materials traceable to NIST weights and/or NIST gas reference materials.

Cylinder Serial #: AS400477 **Cylinder Size:** EC2 **CGA Connection:** 350 **Fill Pressure:** 2000 PSI

Analysis: Certified Batch Analysis **Lot #:** 4924802

Component(s):	Requested Concentration(s):	Actual Concentration(s):
Carbon Monoxide	2%	2.0%
Carbon Dioxide	15%	15.0%
Nitrogen	BALANCE	BALANCE

Expiration Date: 09/2022

Approved By:

Ron Abbott

Ron Abbott

The information contained herein has been prepared at your request by qualified experts. While we believe that the information is accurate within the limits of the analytical methods employed, and is complete to the extent of the specific analyses performed, we make no warranty or representation as to the suitability of the use of the information for any particular purpose. The information is offered with the understanding that any use of the information is at the sole discretion and risk of the user. In no event shall the liability arising out of the use of the information contained herein exceed the fee established for providing such information.

Certificate of Calibration

Certificate Number: **698278**

JJ Calibrations, Inc.
7007 SE Lake Rd
Portland, OR 97267-2105
Phone 503.786.3005
FAX 503.786.2994

Omni-Test Laboratories
13327 NE Airport Way
Portland, OR 97230

ACCREDITED
0723.01
Calibration

PO: **190231**
Order Date: 04/04/2019
Authorized By: **N/A**

Property #: OMNI-00650
User: N/A
Department: N/A
Make: Control Company
Model: 6530
Serial #: 181062211
Description: Thermohygrometer / Barometer
Procedure: 403406
Accuracy: ±3%RH, ±.4°C(0.8°F), ±4mbar(0.12inHg)

Calibrated on: 04/18/2019
*Recommended Due: 04/18/2020
Environment: 22 °C 53 % RH
* As Received: Within Tolerance
* As Returned: Within Tolerance
Action Taken: Calibrated
Technician: **146**

Remarks: * Many factors may cause the unit to drift out of calibration before the recommended due date. Any reported error is the absolute value between the reference and the unit. Uncertainties include the effects of the unit.

Standards Used

Std ID	Manufacturer	Model	Nomenclature	Due Date	Trace ID
847A	Fluke	RPM4	Reference Pressure Monitor	11/21/2019	688957
644A	Thunder Scientific	1200	Two Pressure Humidity Generator	07/30/2019	674006

Measurement Data

Parameter / Measurement Description	Range Unit	Reference	Min	Max	*Error	UUT	Uncertainty
Before/After							Accredited = ✓
Humidity							
	%	13.0	10	16	1	14 %	5.8E-01 ✓
	%	50.0	47	53	2	48 %	5.8E-01 ✓
	%	80.0	77	83	3	77 %	5.8E-01 ✓
Temperature							
	°C	20.00	19.6	20.4	0.4	19.6 °C	8.1E-02 ✓
	°C	35.00	34.6	35.4	0.4	34.6 °C	8.1E-02 ✓
	°C	50.00	49.6	50.4	0.2	49.8 °C	8.1E-02 ✓
Barometer							
	29 inHg	29.6210	29.501	29.741	0.009	29.630 inHg	8.1E-02 ✓

JJ Calibrations, Inc. certifies that this instrument has been calibrated in accordance with the JJ Calibrations Quality Assurance Manual with the stated procedure using standards that are traceable to the National Institute of Standards and Technology (NIST), or other National Measurement Institutes (NMI's), or by using natural physical constants, intrinsic standards or ratio calibration techniques. The quality system and this certificate are in compliance with ANSI/NCSL Z540-1-1994, ISO/IEC 17025-2005, ISO 10012-1, the ISO 9000 family and QS 9000. The expanded uncertainties of measurements for this calibration are based upon 95% (2 sigma) confidence limits. Unless otherwise stated, a test accuracy ratio (TAR) of 4:1, if achievable, is maintained. The results reported herein apply only to the calibration of the item described above. This report may not be reproduced, except in full, without prior written consent of JJ Calibrations, Inc.
JJ Calibrations, Inc. quality system has been assessed and accredited to ISO/IEC 17025:2005.

Reviewer

3 Issued 04/19/2019 Rev # 15

Inspector

Certificate of Calibration

Certificate Number: **685888**

JJ Calibrations, Inc.
7007 SE Lake Rd
Portland, OR 97267-2105
Phone 503.786.3005
FAX 503.786.2994

Omni-Test Laboratories
13327 NE Airport Way
Portland, OR 97230

ACCREDITED
0723.01
Calibration

PO: **180188**
Order Date: 10/09/2018
Authorized By: **N/A**

Property #: OMNI-00283A
User: N/A
Department: N/A
Make: Troemner Inc
Model: 1mg-100g (Class F)
Serial #: 47883
Description: Mass Set, 21pc
Procedure: DCN 500901
Accuracy: Class F

Calibrated on: 10/26/2018
*Recommended Due: 10/26/2023
Environment: **20** °C **57** % RH
* As Received: Within Tolerance
* As Returned: Within Tolerance
Action Taken: Calibrated
Technician: **139**

Remarks: * Many factors may cause the unit to drift out of calibration before the recommended due date. Any reported error is the absolute value between the reference and the unit. Uncertainties include the effects of the unit.

This set meets Class F specifications.
Received and returned eight (8) masses in a black case secured by a rubber band.

Standards Used

Std ID	Manufacturer	Model	Nomenclature	Due Date	Trace ID
723A	Rice Lake	1mg-200g (Class 0)	Mass Set,	03/23/2019	668240
800A	Sartorius	MSA225W100DI	Analytical Balance	12/11/2018	663857

Measurement Data

Parameter Measurement Description	Range Unit	Reference	Min	Max	ᵏError	UUT	Uncertainty Accredited = ✓
Before/After							
Mass							
Dot	200 mg	200.00030	199.4603	200.5403	0.0500	200.0503 mg	6.2E-01 ✓
	1 g	1.00000880	0.9991088	1.0009088	0.0000000	1.0000088 g	1E-03 ✓
	2 g	2.00001470	1.9989147	2.0011147	0.0003250	2.0003397 g	1.3E-03 ✓
	5 g	5.00000840	4.9985084	5.0015084	0.0000400	4.9999684 g	1.7E-03 ✓
	10 g	10.0000100	9.998010	10.002010	0.000245	9.999765 g	2.3E-03 ✓
Dot	20 g	20.0000140	19.996014	20.004014	0.000990	20.001004 g	4.6E-03 ✓
	50 g	49.9999660	49.989966	50.009966	0.000595	49.999371 g	1.1E-02 ✓
	100 g	100.000000	99.98000	100.02000	0.00194	99.99806 g	2.3E-02 ✓

JJ Calibrations, Inc. certifies that this instrument has been calibrated in accordance with the JJ Calibrations Quality Assurance Manual with the stated procedure using standards that are traceable to the National Institute of Standards and Technology (NIST), or other National Measurement Institutes (NMI's), or by using natural physical constants, intrinsic standards or ratio calibration techniques. The quality system and this certificate are in compliance with ANSI/NCSL Z540-1-1994, ISO/IEC 17025-2005, ISO 10012-1, the ISO 9000 family and QS 9000. The expanded uncertainties of measurements for this calibration are based upon 95% (2 sigma) confidence limits. Unless otherwise stated, a test accuracy ratio (TAR) of 4:1, if achievable, is maintained. The results reported herein apply only to the calibration of the item described above. This report may not be reproduced, except in full, without prior written consent of JJ Calibrations, Inc.
JJ Calibrations, Inc. quality system has been assessed and accredited to ISO/IEC 17025:2005.

Reviewer

3 Issued 10/29/2018 Rev # 15

Inspector

Thermal Metering System Calibration
Y Factor

Manufacturer:	Apex
Model:	XC-60-EP
Serial Number:	0702003
OMNI Tracking No.:	OMNI-00371
Calibrated Orifice:	☐ Yes

Average Gas Meter y Factor	Orifice Meter dH@
0.992	N/A

Calibration Date:	07/02/19	
Calibrated by:	B. Davis	
Calibration Frequency:	6 months	
Next Calibration Due:	7/17/2019	
Instrument Range:	1.000	cfm
Standard Temp.:	68	oF
Standard Press.:	29.92	"Hg
Barometric Press., Pb:	30.2	"Hg
Signature/Date:		7/21/2017

Previous Calibration Comparision

Date	1/17/2019	Acceptable Deviation (5%)	Deviation
y Factor	1.009	0.05045	0.017
Acceptance	Acceptable		

Current Calibration

Acceptable y Deviation	0.020
Maximum y Deviation	0.005
Acceptable dH@ Deviation	N/A
Maximum dH@ Deviation	N/A
Acceptance	Acceptable

Reference Standard *			
Standard Calibrator	Model	Standard Test Meter	
	S/N	OMNI-00001	
	Calib. Date	18-Nov-18	
	Calib. Value	0.9981	y factor (ref)

Calibration Parameters	Run 1	Run 2	Run 3
Reference Meter Pressure ("H2O), Pr	0.00	0.00	0.00
DGM Pressure ("H2O), Pd	3.00	1.70	1.00
Initial Reference Meter	187.8	193	198.9
Final Reference Meter	192.9	198.8	204.505
Initial DGM	0	0	0
Final DGM	5.073	5.848	5.668
Temp. Ref. Meter (°F), Tr	72.5	72.1	72.5
Temperature DGM (°F), Td	73.0	74.0	75.0
Time (min)	26.8	47.1	52.1
Net Volume Ref. Meter, Vr	5.100	5.800	5.605
Net Volume DGM, Vd	5.073	5.848	5.668
Gas Meter y Factor =	**0.997**	**0.989**	**0.989**
Gas Meter y Factor Deviation (from avg.)	0.005	0.003	0.003
Orifice dH@	**N/A**	**N/A**	**N/A**
Orifice dH@ Deviation (from avg.)	N/A	N/A	N/A

where:

1. Deviation = |Average value for all runs - current run value|

** 2. y = [Vr x (y factor (ref)) x (Pb + (Pr/ 13.6)) x (Td + 460)]/ [Vd x (Pb + (Pd / 13.6)) x (Tr + 460)]

** 3. dH@ = 0.0317 x Pd / (Pb (Td + 460)) x [(Tr + 460) x time) / Vr]^2

* Reference calibration is traceable to NIST through NIST Test # 40674, Kimble ASTM E1272, or NIST traceable laboratory

** Equations come from EPA Method 5

The uncertainty of measurement is ±0.14 ft^3/min. This is based on the reference standard having a TAR (Test Accuracy Ratio) of at least 4:1.

Reviewed By 8/27/19

Temperature Calibration
EPA Method 28R, ASTM 2515

Booth:	Temperature Monitor Type:	Equipment Number:
Mobile	National Instruments Logger	00371, 00372

Reference Meter Equipment Number: 00373	Calibration Due Date: 8/02/17

Calibration Performed By:	Date:	Ambient Temperature:	Barometric Pressure:
B. Davis	7/02/19	74	30.21

Input Temperature (F)	Ambient	Meter A	Meter B	Filter A	Filter B	Tunnel	FB Interior
0	-1	0	0	0	-0	1	1
100	99	100	100	100	99	101	101
300	299	300	300	300	299	300	300
500	499	500	500	500	499	500	500
700	699	700	700	700	700	701	700
1000	999	1000	1000	1000	1000	1000	1000

Input (F)	FB Top	FB Bottom	FB Back	FB Left	FB Right	Imp A	Imp B	Cat	Stack
0	1	1	1	1	0	0	-0	0	1
100	101	101	101	101	101	100	100	100	101
300	300	300	300	300	300	299	299	299	301
500	500	500	500	500	501	499	499	499	501
700	700	700	700	700	700	699	699	699	700
1000	1001	1000	1001	1000	1001	1000	1000	1000	1001
1500								1499	
2000								1999	

Technician signature: [signature] Date: 7/2/19

Reviewed By: [signature] Date: 08/27/19

DIFFERENTIAL PRESSURE GAUGE CALIBRATION DATA SHEET

Instrument to be calibrated: Pressure Transducer

Maximum Range: 0-2" WC ID Number: OMNI-00371

Calibration Instrument: Digital Manometer ID Number: OMNI-00395

Date: 7/15/19 By: B. Davis

This form is to be used only in conjunction with Standard Procedure C-SPC.

Range of Calibration Point ("WC)	Digital Manometer Input ("WC)	Pressure Gauge Response ("WC)	Difference (Input - Response)	% Error of Full Span*
0-20% Max. Range 0 - 0.4	0.045	0.042	0.003	0.15
20-40% Max. Range 0.4 - 0.8	0.444	0.437	0.003	0.15
40-60% Max. Range 0.8 – 1.2	0.854	0.850	0.004	0.20
60-80% Max. Range 1.2 – 1.6	1.370	1.368	0.002	0.10
80-100% Max. Range 1.6 – 2.0	1.706	1.695	0.011	0.55

*Acceptable tolerance is 4%.

The uncertainty of measurement is ±0.4" WC. This is based on the reference standard having a TAR (Test Accuracy Ratio) of at least 4:1.

Technician signature: Date: 8/2/19

Reviewed by: Date: 08/27/19

Thermal Metering System Calibration
Y Factor

Manufacturer:	Apex
Model:	XC-60-EP
Serial Number:	0702004
OMNI Tracking No.:	OMNI-00372
Calibrated Orifice:	☐ Yes

Previous Calibration Comparision

Date	1/17/2019	Acceptable Deviation (5%)	Deviation
y Factor	0.996	0.0498	0.007
Acceptance	Acceptable		

Current Calibration

Acceptable y Deviation	0.020
Maximum y Deviation	0.004
Acceptable dH@ Deviation	N/A
Maximum dH@ Deviation	N/A
Acceptance	Acceptable

Average Gas Meter y Factor	**Orifice Meter dH@**
0.989	**N/A**

Calibration Date:	07/02/19	
Calibrated by:	B. Davis	
Calibration Frequency:	6 months	
Next Calibration Due:	7/17/2019	
Instrument Range:	1.000	cfm
Standard Temp.:	68	oF
Standard Press.:	29.92	"Hg
Barometric Press., Pb:	30.2	"Hg
Signature/Date:		8/27/19

Reference Standard *			
Standard Calibrator	Model	Standard Test Meter	
	S/N	OMNI-00001	
	Calib. Date	14-Nov-18	
	Calib. Value	0.9981	y factor (ref)

Calibration Parameters	Run 1	Run 2	Run 3
Reference Meter Pressure ("H2O), Pr	0.00	0.00	0.00
DGM Pressure ("H2O), Pd	2.00	1.00	0.80
Initial Reference Meter	204.6	212.1	218.7
Final Reference Meter	212	218.6	226
Initial DGM	0	0	0
Final DGM	7.432	6.584	7.406
Temp. Ref. Meter (°F), Tr	72.7	72.8	73.7
Temperature DGM (°F), Td	75.0	75.0	76.0
Time (min)	41.3	51.5	64.5
Net Volume Ref. Meter, Vr	7.400	6.500	7.300
Net Volume DGM, Vd	7.432	6.584	7.406
Gas Meter y Factor =	**0.993**	**0.987**	**0.986**
Gas Meter y Factor Deviation (from avg.)	0.004	0.002	0.003
Orifice dH@	**N/A**	**N/A**	**N/A**
Orifice dH@ Deviation (from avg.)	N/A	N/A	N/A

where:

1. Deviation = |Average value for all runs - current run value|

** 2. y = [Vr x (y factor (ref)) x (Pb + (Pr/ 13.6)) x (Td + 460)]/ [Vd x (Pb + (Pd / 13.6)) x (Tr + 460)]

** 3. dH@ = 0.0317 x Pd / (Pb (Td + 460)) x [(Tr + 460) x time) / Vr]^2

* Reference calibration is traceable to NIST through NIST Test # 40674, Kimble ASTM E1272, or NIST traceable laboratory

** Equations come from EPA Method 5

The uncertainty of measurement is ±0.14 ft^3/min. This is based on the reference standard having a TAR (Test Accuracy Ratio) of at least 4:1.

Reviewed By 8/27/19

Temperature Calibration
EPA Method 28R, ASTM 2515

Booth:	Temperature Monitor Type:	Equipment Number:
Mobile	National Instruments Logger	00371, 00372

Reference Meter Equipment Number: 00373	Calibration Due Date: 8/02/17

Calibration Performed By:	Date:	Ambient Temperature:	Barometric Pressure:
B. Davis	7/02/19	74	30.21

Input Temperature (F)	Ambient	Meter A	Meter B	Filter A	Filter B	Tunnel	FB Interior
0	-1	0	0	0	-0	1	1
100	99	100	100	100	99	101	101
300	299	300	300	300	299	300	300
500	499	500	500	500	499	500	500
700	699	700	700	700	700	701	700
1000	999	1000	1000	1000	1000	1000	1000

Input (F)	FB Top	FB Bottom	FB Back	FB Left	FB Right	Imp A	Imp B	Cat	Stack
0	1	1	1	1	0	0	-0	0	1
100	101	101	101	101	101	100	100	100	101
300	300	300	300	300	300	299	299	299	301
500	500	500	500	500	501	499	499	499	501
700	700	700	700	700	700	699	699	699	700
1000	1001	1000	1001	1000	1001	1000	1000	1000	1001
1500								1499	
2000								1999	

Technician signature: [signature] Date: 7/2/19

Reviewed By: [signature] Date: 08/27/19

DIFFERENTIAL PRESSURE GAUGE CALIBRATION DATA SHEET

Instrument to be calibrated: Pressure Transducer

Maximum Range: 0-2" WC ID Number: OMNI-00372

Calibration Instrument: Digital Manometer ID Number: OMNI-00395

Date: 7/15/19 By: B. Davis

This form is to be used only in conjunction with Standard Procedure C-SPC.

Range of Calibration Point ("WC)	Digital Manometer Input ("WC)	Pressure Gauge Response ("WC)	Difference (Input - Response)	% Error of Full Span*
0-20% Max. Range 0 - 0.4	0.034	0.032	0.002	0.10
20-40% Max. Range 0.4 - 0.8	0.760	0.761	0.001	0.05
40-60% Max. Range 0.8 – 1.2	0.982	0.979	0.003	0.15
60-80% Max. Range 1.2 – 1.6	1.384	1.383	0.001	0.05
80-100% Max. Range 1.6 – 2.0	1.750	1.751	0.001	0.05

*Acceptable tolerance is 4%.

The uncertainty of measurement is ±0.4" WC. This is based on the reference standard having a TAR (Test Accuracy Ratio) of at least 4:1.

Technician signature: _____ Date: 8/2/19

Reviewed by: _____ Date: _____

Certificate of Calibration

Certificate Number: **686722**

JJ Calibrations, Inc.
7007 SE Lake Rd
Portland, OR 97267-2105
Phone 503.786.3005
FAX 503.786.2994

Omni-Test Laboratories
13327 NE Airport Way
Portland, OR 97230

ACCREDITED
0723.01
Calibration

PO: **180192**
Order Date: 10/22/2018
Authorized By: **N/A**

Property #: OMNI-00410
User: N/A
Department: N/A
Make: Dwyer
Model: 1430
Serial #: OMNI-00410
Description: Microtector
Procedure: DCN 500908
Accuracy: ±0.00025" WC

Calibrated on: 10/30/2018
*Recommended Due: 10/30/2019
Environment: **22** °C **44** % RH
* As Received: Limited
* As Returned: Limited
Action Taken: Calibrated
Technician: **111**

Remarks: * Many factors may cause the unit to drift out of calibration before the recommended due date. Any reported error is the absolute value between the reference and the unit. Uncertainties include the effects of the unit.

Previous limitation of micrometer head calibrated only continued. .001" reading micrometer head ±.001" (LSD) tolerance applied.

Standards Used

Std ID	Manufacturer	Model	Nomenclature	Due Date	Trace ID
541A	Select	E8FED2	Gage Block Set, 8pc	12/18/2018	663864

Measurement Data

Parameter / Measurement Description	Range Unit	Reference	Min	Max	*Error	UUT	Uncertainty
Before/After							Accredited = ✓
Length							
	Inch	0.1300	0.129	0.131	0.001	0.129 Inch	1.1E-03 ✓
	Inch	0.3850	0.384	0.386	0.001	0.384 Inch	1.1E-03 ✓
	Inch	0.6150	0.614	0.616	0.001	0.614 Inch	1.1E-03 ✓
	Inch	0.8700	0.869	0.871	0.001	0.869 Inch	1.1E-03 ✓
	Inch	1.0000	0.999	1.001	0.001	0.999 Inch	1.1E-03 ✓

JJ Calibrations, Inc. certifies that this instrument has been calibrated in accordance with the JJ Calibrations Quality Assurance Manual with the stated procedure using standards that are traceable to the National Institute of Standards and Technology (NIST), or other National Measurement Institutes (NMI's), or by using natural physical constants, intrinsic standards or ratio calibration techniques. The quality system and this certificate are in compliance with ANSI/NCSL Z540-1-1994, ISO/IEC 17025-2005, ISO 10012-1, the ISO 9000 family and QS 9000. The expanded uncertainties of measurements for this calibration are based upon 95% (2 sigma) confidence limits. Unless otherwise stated, a test accuracy ratio (TAR) of 4:1, if achievable, is maintained. The results reported herein apply only to the calibration of the item described above. This report may not be reproduced, except in full, without prior written consent of JJ Calibrations, Inc.
JJ Calibrations, Inc. quality system has been assessed and accredited to ISO/IEC 17025:2005.

Reviewer

3 Issued 10/31/2018 Rev # 15

Inspector

Calibration Record

Vaneometer Air Velocity Meter OMNI-00559

Calibration Service Record			
Date	**By**	**Results**	**Date of next Calibration**
11/17/17	BR	Installed New Vane from Manufacturer	5/17/18
7/12/18	BR	Installed New Vane from Manufacturer	1/12/19
1/15/19	BR	Installed New Vane From Manufacture	6/15/19
6/13/19	BR	Installed New Vane From Manufacture	12/13/19

VWR Temperature Hygrometer Calibration Procedure and Data Sheet

Frequency: Every Two Years

Step 1: Locate NIST traceable standard.

Step 2: Place unit to be calibrated, tracking No. OMNI-00592, inside OMNI desiccate box on the same shelf with the NIST traceable standard.

Step 3: After a period of not less than four hours record the temperature and humidity of both units in the spaces provide below.

Step 4: If the unit to be calibrated matches the NIST standard within ± 4%, it is acceptable. If not, the unit needs to be sent to a repair company or replaced.

Verification Data:

Date: ~~1/29/19~~ 1/29/19 Technician: B Davis

Time in desiccate: 0840 Recording time: 1415

NIST Standard Temperature: 70.2 °F NIST Standard Humidity: 14.6

Test Unit Temperature Reading: 69.9 °F Test Unit Humidity Reading: 12.1

Test unit OMNI-00592 is X or was not ___ within acceptable limits.

Technician Signature: [signature]

Comments: A difference of 2.5% was found, with a full scale of 90% on the Instrument this gives a 2.77% deviation.

ZRE NDIR/O_2

USER'S MANUAL

1312 West Grove Avenue
Orange, CA 92865-4134
Phone: 714-974-5560 Fax: 714-921-2531
www.gasanalyzers.com

Certificate of Calibration

Certificate Number: **704810**

JJ Calibrations, Inc.
7007 SE Lake Rd
Portland, OR 97267-2105
Phone 503.786.3005
FAX 503.786.2994

OnSite

ACCREDITED
0723.01
Calibration

Omni-Test Laboratories
13327 NE Airport Way
Portland, OR 97230

PO: **190241**
Order Date: 07/10/2019
Authorized By: **N/A**

Property #: OMNI-00637
User: N/A
Department: N/A
Make: Mettler Toledo
Model: MS104TS/00
Serial #: B729400181
Description: Analytical Scale, 120g
Procedure: DCN 500887
Accuracy: ±0.0005g

Calibrated on: 07/10/2019
*Recommended Due: 01/10/2020
Environment: 21 °C 39 % RH
* As Received: Within Tolerance
* As Returned: Within Tolerance
Action Taken: Calibrated
Technician: **111**

Remarks: * Many factors may cause the unit to drift out of calibration before the recommended due date. Any reported error is the absolute value between the reference and the unit. Uncertainties include the effects of the unit.

Standards Used

Std ID	Manufacturer	Model	Nomenclature	Due Date	Trace ID
723A	Rice Lake	1mg-200g (Class 0)	Mass Set,	05/22/2020	694890

Measurement Data

Parameter / Measurement Description	Range Unit	Reference	Min	Max	*Error	UUT	Uncertainty Accredited = ✓
Before/After							
Force							
	g	10.00000	9.9995	10.0005	0.0000	10.0000 g	1.2E-05 ✓
	g	30.00000	29.9995	30.0005	0.0000	30.0000 g	1.3E-05 ✓
	g	60.00000	59.9995	60.0005	0.0001	60.0001 g	1.8E-05 ✓
	g	90.00000	89.9995	90.0005	0.0000	90.0000 g	2.1E-05 ✓
	g	120.00000	119.9995	120.0005	0.0001	119.9999 g	2.9E-05 ✓

JJ Calibrations, Inc. certifies that this instrument has been calibrated in accordance with the JJ Calibrations Quality Assurance Manual with the stated procedure using standards that are traceable to the National Institute of Standards and Technology (NIST), or other National Measurement Institutes (NMI's), or by using natural physical constants, intrinsic standards or ratio calibration techniques. The quality system and this certificate are in compliance with ANSI/NCSL Z540-1-1994, ISO/IEC 17025-2005, ISO 10012-1, the ISO 9000 family and QS 9000. The expanded uncertainties of measurements for this calibration are based upon 95% (2 sigma) confidence limits. Unless otherwise stated, a test accuracy ratio (TAR) of 4:1, if achievable, is maintained. The results reported herein apply only to the calibration of the item described above. This report may not be reproduced, except in full, without prior written consent of JJ Calibrations, Inc.
JJ Calibrations, Inc. quality system has been assessed and accredited to ISO/IEC 17025:2005.

Reviewer

3 Issued 07/12/2019 Rev # 15

Inspector

Example Calculations

Equations and Sample Calculations – ASTM E2780 & E2515

Manufacturer: Hearth & Home
Model: Dauntless
Run: 2
Category:

Equations used to calculate the parameters listed below are described in this appendix. Sample calculations are provided for each equation. The raw data and printout results from a sample run are also provided for comparison to the sample calculations.

M_{FTAdb} - Total weight of fuel, dry basis, kg

BR – Dry burn rate, kg/hr

V_s – Average gas velocity in the dilution tunnel, ft/sec

Q_{sd} – Average gas flow rate in dilution tunnel, dscf/hr

$V_{m(std)}$ – Volume of gas sampled, corrected to dry standard conditions, dscf

m_n – Total particulate matter collected, mg

C_s - Concentration of particulate matter in tunnel gas, dry basis, corrected to standard conditions, g/dscf

E_T – Total particulate emissions, g

PR - Proportional rate variation

PM_R – Particulate emissions for test run, g/hr

PM_F – Particulate emission factor for test run, g/dry kg of fuel burned

M_{FTAdb} - Total weight of fuel, dry basis, kg
ASTM E2780 equation (4)

$$M_{FTAdb} = M_{Cdb}$$

Sample calculation:

$$M_{FTAdb} = 8.09$$

$$= \mathbf{8.09} \text{ kg}$$

BR – dry burn rate, kg/hr
ASTM E2780 equation (5)

$$BR = \frac{60\ M_{FTAdb}}{\theta}$$

Where,

θ = Total length of test run, min

Sample Calculation:

M_{Bdb} = 8.09 kg

θ = 500 min

$$BR = \frac{60 \times 8.09}{500}$$

BR = **0.97** kg/hr

V_s – Average gas velocity in the dilution tunnel, ft/sec
ASTM E2515 equations (9)

$$v_s = F_P \times k_p \times C_p \times (\sqrt{\Delta P})_{avg} \times \sqrt{\frac{T_{s(avg)}}{P_s \times M_s}}$$

Where:

F_p	=	Adjustment factor for center of tunnel pitot tube placement, Fp = $\frac{V_{strav}}{V_{scent}}$, ASTM E2515 Equation (1)
v_{scent}	=	Dilution tunnel velocity calculated after the multi-point pitot traverse at the center, ft/sec
v_{strav}	=	Dilution tunnel velocity calculated after the multi-point pitot traverse, ft/sec
k_p	=	Pitot tube constant, 85.49
C_p	=	Pitot tube coefficient: 0.99, unitless
ΔP*	=	Velocity pressure in the dilution tunnel, in H_2O
T_s	=	Absolute average gas temperature in the dilution tunnel, °R; (°R = °F + 460)
P_s	=	Absolute average gas static pressure in dilution tunnel, = P_{bar} + P_g , in Hg
P_{bar}	=	Barometric pressure at test site, in. Hg
P_g	=	Static pressure of tunnel, in. H_20; (in Hg = in H_20/13.6)
M_s	=	**The dilution tunnel wet molecular weight; M_s = 28.78 assuming a dry weight of 29 lb/lb-mole

Sample calculation:

$$Fp = \frac{19.37}{19.95} = 0.971$$

$$V_s = 0.971 \times 85.49 \times 0.99 \times 0.298 \times \left(\frac{77.8 + 460}{\left(29.54 + \frac{-0.28}{13.6}\right) \times 28.78} \right)^{1/2}$$

V_s = **19.49** ft/s

*The ASTM test standard mistakenly has the square root of the average delta p instead of the average of the square root of delta p. The current EPA Method 2 is also incorrect. This was verified by Mike Toney at EPA.

**The ASTM test standard mistakenly identifies Ms as the dry molecular weight. It should be the wet molecular weight as indicated in EPA Method 2.

Q_{sd} – Average gas flow rate in dilution tunnel, dscf/hr
ASTM E2515 equation (3)

$$Q_{sd} = 3600 \times (1 - B_{ws}) \times v_s \times A \times \frac{T_{std}}{T_{s(avg)}} \times \frac{P_s}{P_{std}}$$

Where:

3600	=	Conversion from seconds to hours (ASTM method uses 60 to convert in minutes)
B_{ws}	=	Water vapor in gas stream, proportion by volume; assume 2%
A	=	Cross sectional area of dilution tunnel, ft^2
T_{std}	=	Standard absolute temperature, 528 °R
P_s	=	Absolute average gas static pressure in dilution tunnel, = P_{bar} + P_g , in Hg
$T_{s(avg)}$	=	Absolute average gas temperature in the dilution tunnel, °R; (°R = °F + 460)
P_{std}	=	Standard absolute pressure, 29.92 in Hg

Sample calculation:

$$Q_{sd} = 3600 \times (1 - 0.02) \times 19.49 \times 0.196 \times \frac{528}{77.8 + 460} \times \frac{29.5 + \frac{-0.28}{13.6}}{29.92}$$

Q_{sd} = **13074.7** dscf/hr

$V_{m(std)}$ – Volume of Gas Sampled Corrected to Dry Standard Conditions, dscf
ASTM E2515 equation (6)

$$V_{m(std)} = K_1 \, V_m \, Y \frac{P_{bar} + \left(\frac{\Delta H}{13.6}\right)}{T_m}$$

Where:

K_1	=	17.64 °R/in. Hg
V_m	=	Volume of gas sample measured at the dry gas meter, dcf
Y	=	Dry gas meter calibration factor, dimensionless
P_{bar}	=	Barometric pressure at the testing site, in. Hg
ΔH	=	Average pressure differential across the orifice meter, in. H_2O
T_m	=	Absolute average dry gas meter temperature, °R

Sample Calculation:

Using equation for Train 1:

$$V_{m(std)} = 17.64 \times 82.270 \times 0.992 \times \frac{\left(29.54 + \frac{2.28}{13.6}\right)}{(72.6 + 460)}$$

$V_{m(std)}$ = **80.293** dscf

Using equation for Train 2:

$$V_{m(std)} = 17.64 \times 86.616 \times 0.989 \times \frac{\left(29.54 + \frac{1.80}{13.6}\right)}{(70.0 + 460)}$$

$V_{m(std)}$ = **84.589** dscf

Using equation for ambient train:

$$V_{m(std)} = 17.64 \times 0.00 \times 0 \times \frac{\left(\underline{29.54} + \frac{0.00}{13.6}\right)}{(71.6 + 460)}$$

$V_{m(std)}$ = **0** dscf

m_n – Total Particulate Matter Collected, mg
ASTM E2515 Equation (12)

$$m_n = m_p + m_f + m_g$$

Where:

m_p = mass of particulate matter from probe, mg

m_f = mass of particulate matter from filters, mg

m_g = mass of particulate matter from filter seals, mg

Sample Calculation:

Using equation for Train 1 (first hour):

m_n = 0.0 + 0.6 + 0.0

m_n = 0.6 mg

Using equation for Train 1 (post-first hour):

m_n = 0.0 + 2.5 + 0.3

m_n = 2.8 mg

Train 1 aggregate:

m_n = 0.6 + 2.8

m_n = **3.4** mg

Using equation for Train 2:

m_n = 0 + 3.2 + 0.3

m_n = **3.5** mg

C_s - Concentration of particulate matter in tunnel gas, dry basis, corrected to standard conditions, g/dsc
ASTM E2515 equation (13)

$$C_s = K_2 \times \frac{m_n}{V_{m(std)}}$$

Where:

K_2	=	Constant, 0.001 g/mg
m_n	=	Total mass of particulate matter collected in the sampling train, mg
$V_{m(std)}$	=	Volume of gas sampled corrected to dry standard conditions, dscf

Sample calculation:

For Train 1:

$$C_s = 0.001 \times \frac{3.4}{80.29}$$

C_s = **0.00004** g/dscf

For Train 2

$$C_s = 0.001 \times \frac{3.5}{84.59}$$

C_s = **0.00004** g/dscf

For Ambient Train

$$C_r = 0.001 \times \frac{0.0}{0}$$

C_r = **0** g/dscf

E_T – Total Particulate Emissions, g
ASTM E2515 equation (15)

$$E_T = (c_s - c_r) \times Q_{std} \times \theta$$

Where:

C_s	=	Concentration of particulate matter in tunnel gas, g/dscf
C_r	=	Concentration particulate matter room air, g/dscf
Q_{std}	=	Average dilution tunnel gas flow rate, dscf/hr
θ	=	Total time of test run, minutes

Sample calculation:

For Train 1

E_T = (0.000042 - 0) x 13074.7 x 500 /60

E_T = 4.61 g

For Train 2

E_T = (0.000041 - 0) x 13074.7 x 500 /60

E_T = 4.51 g

Average

E = 4.56 g

Total emission values shall not differ by more than 7.5% from the total average emissions

7.5% of the average =	0.34
Train 1 difference =	0.05
Train 2 difference =	0.05

PR - Proportional Rate Variation
ASTM E2515 equation (16)

$$PR = \left[\frac{\theta \times V_{mi} \times V_s \times T_m \times T_{si}}{\theta_i \times V_m \times V_{si} \times T_{mi} \times T_s} \right] \times 100$$

Where:

θ = Total sampling time, min

θ_i = Length of recording interval, min

V_{mi} = Volume of gas sample measured by the dry gas meter during the “ith” time interval, dcf

V_m = Volume of gas sample as measured by dry gas meter, dcf

V_{si} = Average gas velocity in the dilution tunnel during the "ith" time interval, ft/sec

V_s = Average gas velocity in the dilution tunnel, ft/sec

T_{mi} = Absolute average dry gas meter temperature during the "ith" time interval, ^oR

T_m = Absolute average dry gas meter temperature, ^oR

T_{si} = Absolute average gas temperature in the dilution tunnel during the "ith" time interval, ^oR

T_s = Absolute average gas temperature in the dilution tunnel, ^oR

Sample calculation (for the first 1 minute interval of Train 1):

$$PR = \left(\frac{500 \times 0.304 \times 19.49 \times (85.0 + 460) \times (72.6 + 460)}{2 \times 82.27 \times 19.74 \times (77.8 + 460) \times (75.0 + 460)} \right) \times 100$$

PR = <u>92</u> %

PM_R – Particulate emissions for test run, g/hr
ASTM E2780 equation (6)

$$PM_R = 60\ (E_T/\theta)$$

Where,

E_T = Total particulate emissions, grams

θ = Total length of full integrated test run, min

Sample Calculation:

E_T (Dual train average) = 4.56 g

θ = 500 min

$$PM_R = 60 \times (4.56 / 500)$$

PM_R = **0.55** g/hr

PM_F – Particulate emission factor for test run, g/dry kg of fuel burned
ASTM E2780 equation (7)

$$PM_F = E_T/M_{FTAdb}$$

Sample Calculation:

E_T (Dual train average) = 4.56 g

M_{Bdb} = 8.09 kg

PM_F = 4.56 / 8.09

PM_F = **0.56** g/kg

Alt 125 Letter

UNITED STATES ENVIRONMENTAL PROTECTION AGENCY
RESEARCH TRIANGLE PARK, NC 27711

FEB 28 2018

Mr. Justin White

OFFICE OF
AIR QUALITY PLANNING
AND STANDARDS

Dear Mr. White,

I am writing in response to your letter dated January 12, 2018, regarding wood heaters manufactured by Hearthstone QHPP, Inc. (Hearthstone). This response, dated February 28, 2018, supercedes our previous response (dated February 26, 2018) to correct an inaccuracy regarding required changes to ASTM E3053-17.

You are requesting to use an alternative test method, using cord wood, as referenced in section 60.532(c) of 40 CFR part 60, Subpart AAA, Standards of Performance for New Residential Wood Heaters (Subpart AAA) to meet the 2020 cord wood alternative compliance option. The 2020 cord wood alternative compliance option states that each affected wood heater manufactured or sold at retail for use in the United States on or after May 15, 2020, must not discharge into the atmosphere any gases that contain particulate matter in excess of 2.5 g/hr. Compliance must be determined by a cord wood test method approved by the Administrator along with the procedures in 40 CFR 60.534. You have requested approval to use the procedures and specifications found in ASTM Method E3053-17, a cord wood test method titled, "Standard Test Method for Determining Particulate Matter Emissions from Wood Heaters using Cordwood Test Fuel," in conjunction with ASTM E2515-11 and Canadian Standards Administration (CSA) Method CSA-B415.1-10, which are specified in 40 CFR 60.534.

We understand that Hearthstone is also requesting that the alternative method proposed above be approved to apply broadly to all wood heaters manufactured by Hearthstone meeting the requirements of Subpart AAA, from the approval date of this request until such time that Subpart AAA is revised or replaced to require a different cord wood certification method, providing all requirements of section 60.533 of Subpart AAA are met.

With the caveats set forth below, we approve your alternative test method request for certifying wood heaters using ASTM E3053-17 in conjunction with section 60.534 of Subpart AAA to meet the 2020 cord wood compliance option until such time that Subpart AAA is revised or replaced to require a different cord wood certification method. We also approve application of this alternative method to all wood heaters manufactured by Hearthstone meeting the requirements of Subpart AAA.

As required in Subpart AAA, section 60.354(d), you or your approved test laboratory must also measure the first hour of particulate matter emissions for each test run using a separate filter in one of the two parallel sampling trains. These results must be reported separately and also included in the total particulate matter emissions per run. Also, as required by Subpart AAA, section 60.534(e), you must have your approved laboratory measure the efficiency, heat output, and carbon monoxide emissions of the tested wood heater using CSA-B415.1-10. For measurement of particulate matter emission concentrations, ASTM 2515-11 must be used.

The following change to ASTM E3053-17 must be followed:

1. Coal bed conditions prior to loading test fuel. The coal bed shall be a level plane without valleys or ridges for all test runs in the high, low, and medium burn rate categories.

The following changes to ASTM E2515-11 must be followed:

1. The filter temperature must be maintained between 80 and 90 degrees F during testing.

2. Filters must be weighed in pairs to reduce weighing error propagation; see ASTM 2515-11, Section 10.2.1 Analytical Procedure.

3. Sample filters must be Pall TX-40 or equivalent Teflon-coated glass fiber, and of 47 mm, 90 mm, 100 mm, or 110 mm in diameter.

4. Only one point is allowed outside the +/- 10 percent proportionality range per test run.

A copy of this letter must be included in each certification test report where this alternative test method is utilized.

It is reasonable that this alternative test method approval be broadly applicable to all wood heaters subject to the requirements of 40 CFR part 60, Subpart AAA. For this reason, we will post this letter as ALT-125 on our website at *http://www3.epa.gov/ttn/emc/approalt.html* for use by other interested parties. As noted earlier in this letter, this alternative method approval is valid until such time that Subpart AAA is revised or replaced to require a different cord wood certification method, and at such time, this alternative will be reconsidered and possibly withdrawn.

If you have additional questions regarding this approval, please contact Michael Toney of my staff at 919-541-5247 or toney.mike@epa.gov.

Sincerely,

Steffan M. Johnson, Group Leader
Measurement Technology Group

cc: Amanda Aldridge, EPA/OAQPS/OID
Adam Baumgart-Getz, EPA/OAQPS/OID
Rafael Sanchez, EPA/OECA
Michael Toney, EPA/OAQPS/AQAD